WL183M WL184M WL185M

Lavalier Condenser Microphone

The Shure lavalier condenser microphones, WL183M, WL184M, and WL185M, online user guide.

Version: 0.2 (2026-C)

Table of Contents

WL183M WL184M WL185M Lavalier Condenser Microphone **3**

General Description **3**

Model Variations 3

Setup **3**

Lavalier Distance **4**

Specifications **4**

Accessories **8**

Furnished Accessories 8

Replacement Parts 8

Wiring and Termination **8**

Typical Wiring Table 9

Certifications **9**

WL183M WL184M WL185M
Lavalier Condenser Microphone

General Description

Shure WL185m, WL184m, and WL183m are professional low-profile lavalier microphones for use with compatible wireless bodypack transmitters. 8 mm shorter than their predecessors, the WL185m, WL184m, and WL183m lavaliers deliver full and accurate sound quality with an improved presence response that reproduces crystal clear vocals. For flexible placement on speakers, presenters, and performers, each lavalier is available in either black or white with LEMO or TA4F connector options, and the innovative tie clip can be rotated in 90° intervals for accurate positioning. Shure WL185m, WL184m, and WL183m professional lavaliers include a snap-fit windscreen, single tie clip, and zippered bag for storage and transport.

Model Variations

All models are available in black or white finishes with TA4F or LEMO connectors.

- WL185m: Cardioid
- WL184m: Supercardioid
- WL183m: Omnidirectional

Setup

The WL185m, WL184m, and WL183m come with a tie clip and snap-fit windscreen. Attach these accessories properly for ideal microphone performance.

Attach the Tie Clip

Press the small wire loop to expand the ring on the tie clip. Insert the bottom of the microphone through the tie clip ring from above until the tie clip snaps into the bottom groove on the microphone.

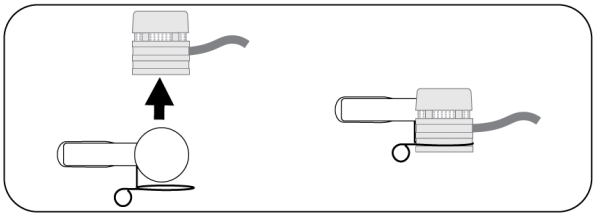

Attach the Snap-Fit Windscreen

To install the snap-fit windscreen, align the curved cable cutout with the cable, then press the windscreen down on the microphone until it clicks onto place. The windscreen provides 30 dB of plosive protection.

Ensure that the curved cutout on the windscreen aligns with the cable on the microphone. Improper windscreen application can impact sound quality.

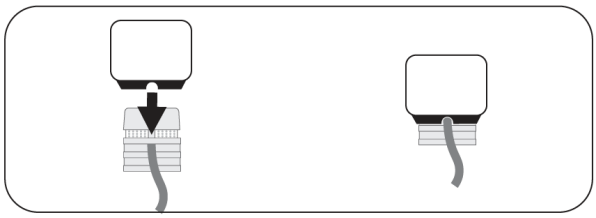

Remove the Snap-Fit Windscreen

The snap-fit windscreen can be removed by spreading the slot in the plastic ring and gently pulling the windscreen off of the microphone.

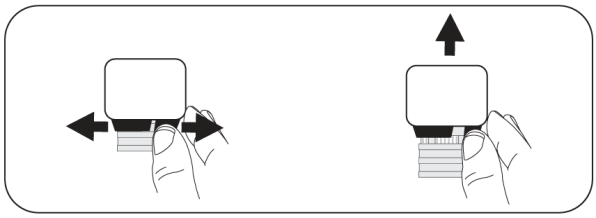

Lavalier Distance

For the best sound, place the microphone 6 to 10 inches (15 to 25 cm) away from the speaker.

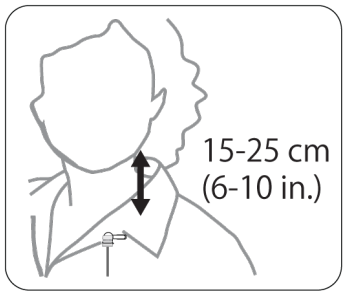

Specifications

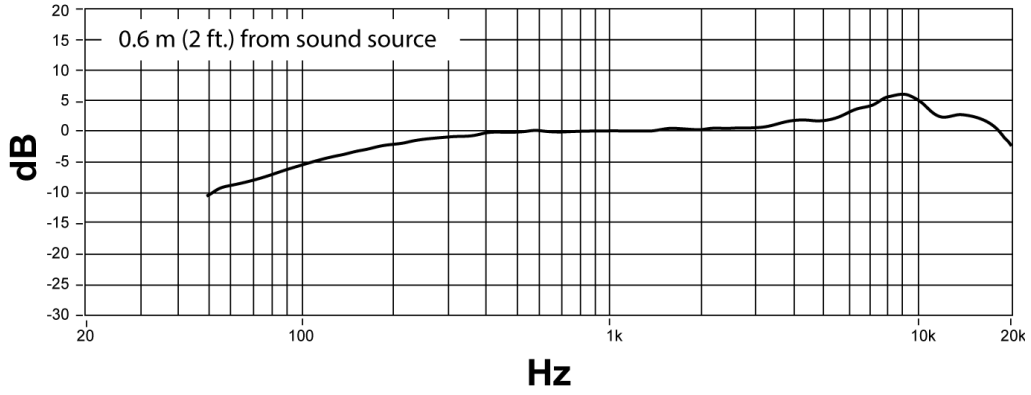

WL185m Frequency Response

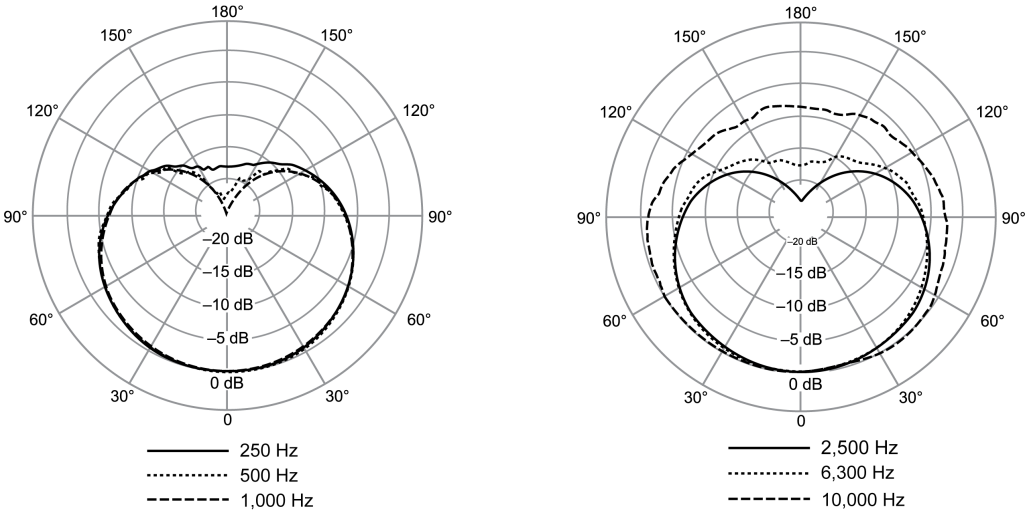

WL185m Polar Pattern

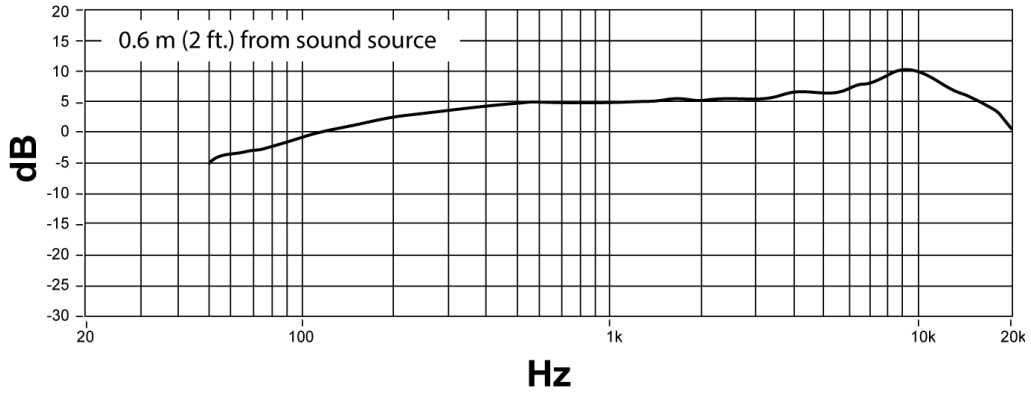

WL184m Frequency Response

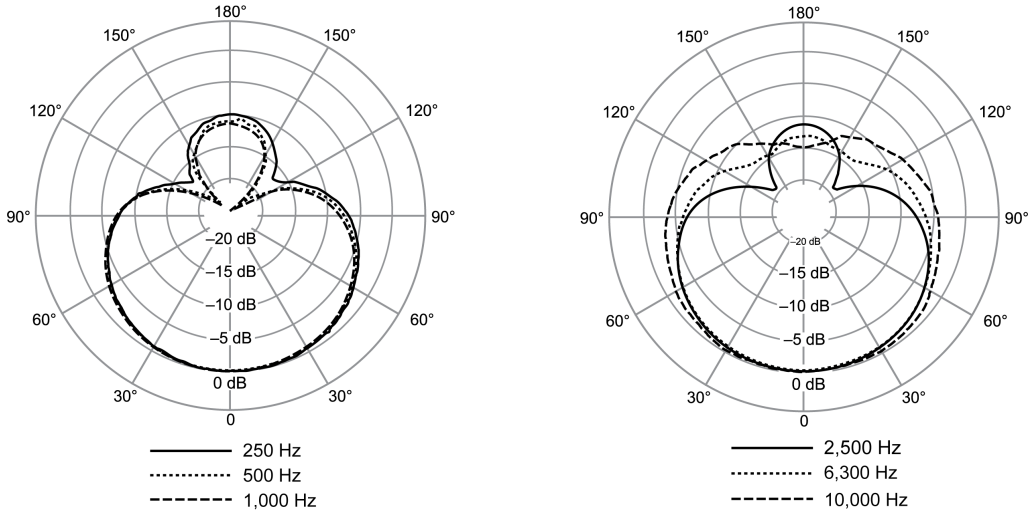

WL184m Polar Pattern

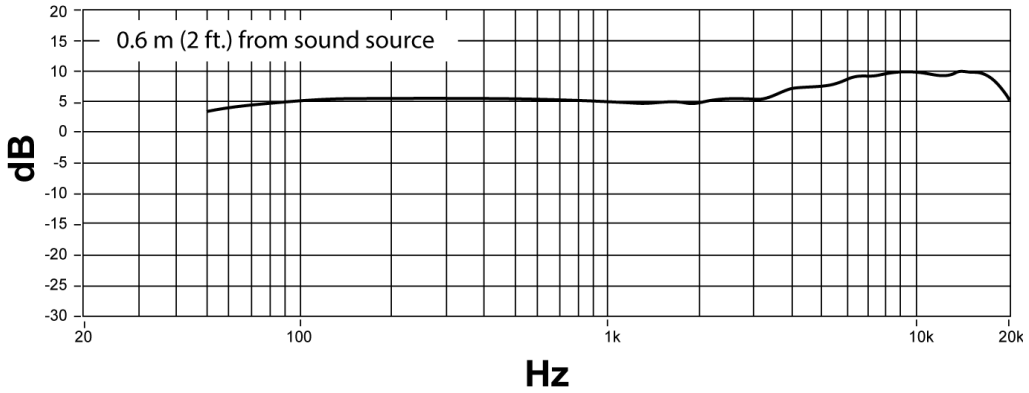

WL183m Frequency Response

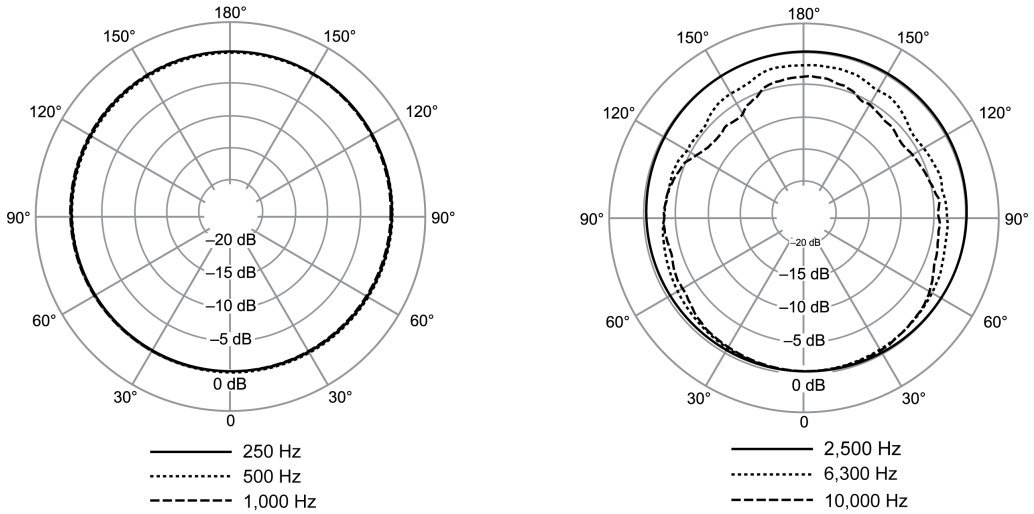

WL183m Polar Pattern

Type
Condenser

Frequency Response
70 to 20,000 Hz

Output Impedance
Using RPM400 preamplifier

95 Ω

Sensitivity[1]

WL185m TA4F	-41.5 dBV/Pa
WL185m LEMO	-36 dBV/Pa
WL184m TA4F	-45 dBV/Pa
WL184m LEMO	-39.5 dBV/Pa
WL183m TA4F	-44 dBV/Pa
WL183m LEMO	-39 dBV/Pa

Maximum SPL

WL185m TA4F	138.4 dB SPL
WL185m LEMO	127.6 dB SPL
WL184m TA4F	141.9 dB SPL
WL184m LEMO	131.1 dB SPL
WL183m TA4F	141 dB SPL
WL183m LEMO	130.6 dB SPL

Self Noise (A-Weighted):

WL185m TA4F	22 dB SPL
WL185m LEMO	22.5 dB SPL
WL184m TA4F	23.3 dB SPL
WL184m LEMO	24 dB SPL
WL183m TA4F	20 dB SPL
WL183m LEMO	22 dB SPL

Dynamic Range

WL185m TA4F	116.4 dB
WL185m LEMO	105.1 dB
WL184m TA4F	118.6 dB

WL184m LEMO	107.1 dB
WL183m TA4F	121 dB
WL183m LEMO	108.6 dB

Polarity

Positive pressure on diaphragm produces positive voltage on pin 3 with respect to pin 1

Bias Voltage

5 VDC bias voltage recommended at microphone connector pin 2 relative to pin 1.

[1] 1 Pa = 94 dB SPL

Accessories

Furnished Accessories

Included in Black variations:

Single Tie Clip, Black (1)	RK187T1-B
Snap-Fit Windscreen, Black (1)	RK187WS-B

Included in White variations:

Single Tie Clip, White (1)	RK187T1-W
Snap-Fit Windscreen, White (1)	RK187WS-W

Replacement Parts

Single Tie Clip, Black (2)	RK187T1-B
Dual Tie Clip, Black (2)	RK187T2-B
Snap-Fit Windscreen, Black (4)	RK187WS-B
Single Tie Clip, White (2)	RK187T1-W
Dual Tie Clip, White (2)	RK187T2-W
Snap-Fit Windscreen, White (4)	RK187WS-W

Wiring and Termination

Typical Wiring Table

Series	Cable Construction	Electrical Design	Polarity	For Use With	Wiring	Line Art (From Solder Side)
WL185m-MTQG, WL184m-MTQG, WL183m-MTQG	1.6mm cable with 2 conductors, 2 shield wires and shield	3-Wire (Source Follower)	Positive with respect to ground	All Shure TA4F Bodypacks	Red wire: Bias(2) Blue wire: Audio(3) Shield wire: Ground(1) Shield: Ground (Shell)	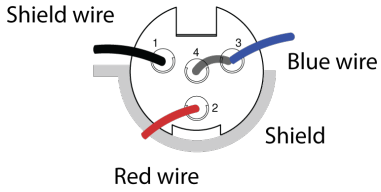
WL185m-LEMO, WL184m-LEMO, WL183m-LEMO	1.6mm cable with 2 conductors, 2 shield wires and shield	2-Wire (Common Source)	Negative with respect to ground	Shure Lemo bodypacks (ADX1-Lemo, Shure UR1M-Lemo, ULXD1-Lemo), Sennheiser SK5212, Lectrosonics SSM, and others	Red wire: Audio/Bias(3) Blue wire: Not connected Shield wire: Ground(1)	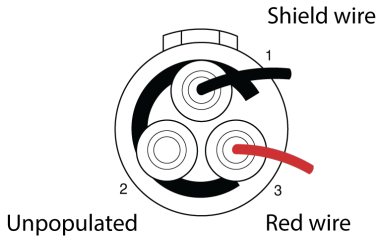

Certifications

This product meets the Essential Requirements of all relevant European directives and is eligible for CE marking.

The CE Declaration of Conformity can be obtained from: www.shure.com/europe/compliance

Authorized European representative:
Shure Europe GmbH
Global Compliance
Jakob-Dieffenbacher-Str. 12
75031 Eppingen, Germany
Phone: +49-7262-92 49 0
Email: info@shure.de
www.shure.com