PRA-AD608 Amplifier, 600W 8-channel

PRAESENSA



- Flexible power partitioning across all channels
- Low power consumption and heat loss
- Full supervision with integrated fail-safe redundancy
- Digital signal processing per channel
- IP-networked on OMNEO for audio and control

This is a flexible and compact multi-channel power amplifier for 100 V or 70 V loudspeaker systems in Public Address and Voice Alarm applications. It fits in centralized system topologies, but also supports decentralized system topologies because of its OMNEO IP-network connection, combined with DC-power from a multifunction power supply.
The output power of each amplifier channel adapts to the connected loudspeaker load, only limited by the total power budget of the whole amplifier. This flexibility, and the integration of a spare amplifier channel, makes it possible to utilize the available power effectively and use less amplifiers for the same loudspeaker load, compared to using traditional amplifiers.
Digital sound processing and control, adjusted to the acoustics and requirements of each zone, allow for better sound quality and speech intelligibility.

Functions

Efficient 8-channel power amplifier

- Transformerless, galvanically isolated, 70/100 V outputs for a maximum total load of 600 W.
- Flexible partitioning of the available output power across all amplifier channels to use it effectively, significantly reducing the amount of required amplifier power in a system.
- Cost- and space-saving, integrated, additional independent spare channel (maximum 600 W) for fail-safe redundancy.
- Class D amplifier channels with two-level power lines for high-efficiency in all operating conditions; dissipation and heat loss is minimized to save on energy and battery capacity for backup power.

Flexibility in loudspeaker topologies

- A/B outputs on every amplifier channel to support redundant loudspeaker wiring topologies. Both outputs are individually supervised and disabled in case of a fault.
- Class A loop wiring possible between the A and B loudspeaker outputs.
- Load independent frequency response; the amplifier channels can be used with any loudspeaker load up to the maximum, without any change in audio quality.

Sound quality

- Audio-over-IP using OMNEO, the high-quality digital audio interface compatible with Dante and AES67; with an audio sample rate of 48 kHz with 24-bit sample size.
- Large signal to noise ratio, wide audio bandwidth and very low distortion and crosstalk.
- Digital signal processing on all amplifier channels, including equalization, limiting and delay, to optimize and tailor the sound in each loudspeaker zone.

Supervision

- Supervision of amplifier operation and all of its connections; faults are reported to the system controller and logged.
- Loudspeaker line integrity supervision without interruption of audio, using end-of-line devices (separately available) for best reliability.

- Network link supervision.

Fault tolerance

- Dual OMNEO network connections, supporting Rapid Spanning Tree Protocol (RSTP), for loop-through connections to adjacent devices.
- Dual 48 VDC inputs with polarity reversal protection, each with a full power DC/DC converter, operating in tandem for redundancy.
- Fully independent amplifier channels; the integrated additional spare channel automatically replaces a failing channel, with due regard of the actual sound processing settings.
- All amplifier channels support two independent loudspeaker groups, A and B, enabling redundant loudspeaker wiring topologies.
- Backup analog audio lifeline input driving the spare amplifier channel to serve all connected loudspeaker zones in case both network connections, or the amplifier network interface, would fail.

Connection and functional diagram

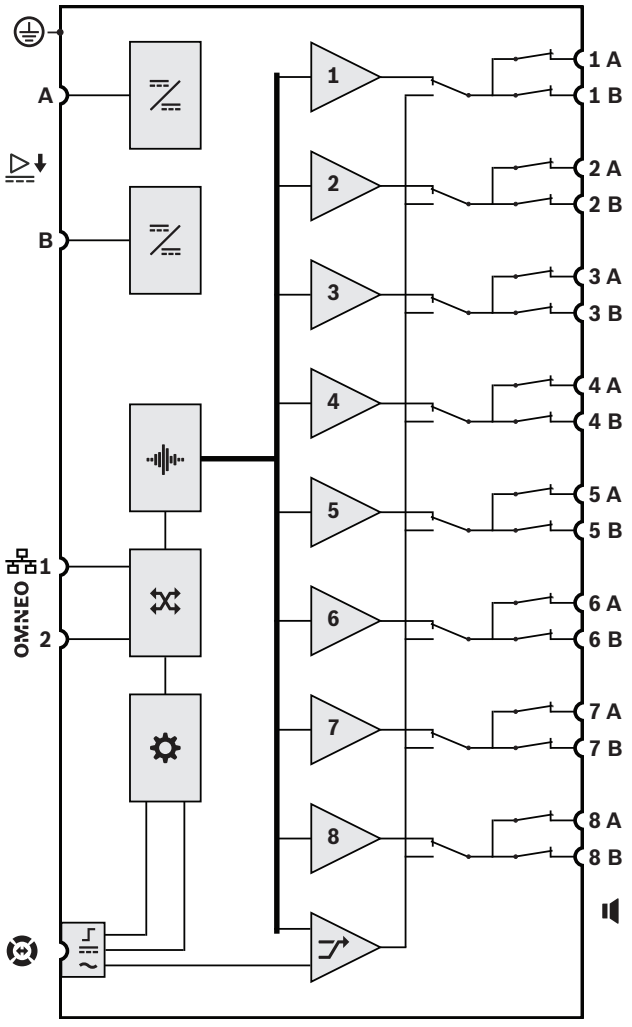

	DC to DC converter		Audio processing (DSP)
	OMNEO network switch		Controller
	Lifeline control interface		Lifeline supply input
	Lifeline audio input	1-8	Amplifier channel
	Spare channel		

Front view



Front panel indicators

	Spare channel substitute 1-8	White
	Signal 1-8 Fault 1-8	Green Yellow/orange

	Ground fault	Yellow/orange
	Device fault	Yellow/orange
	Audio lifeline substitute	White
	Network link to system controller Network link lost Amplifier in standby mode	Green Yellow/orange Blue
	Power on	Green

Rear view



Rear panel indicators

	100 Mbps network 1 Gbps network	Yellow/orange Green
	Power on Device in identification mode	Green Green blinking
	Device fault	Yellow/orange

Rear panel controls

	Device reset (to factory default)	Button

Rear panel connections

	48 VDC input A-B	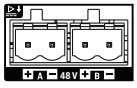
	Lifeline interface	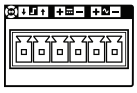
	Loudspeaker output A-B (1-8)	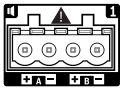
OMNEO	Network port 1-2	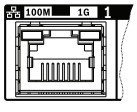
	Safety ground	

Architects' and engineers' specifications

The IP-networked 8-channel amplifier shall be designed exclusively for use with Bosch PRAESENSA systems. The amplifier shall adapt the maximum output power of each amplifier channel to its connected loudspeaker load, with free assignable output power per channel for a total maximum of 600 watt per amplifier, supporting 70 V or 100 V operation with direct drive capability and outputs that are galvanically insulated from ground. The amplifier shall have a built-in independent spare amplifier channel (maximum 600 W) for automatic failover. The amplifier shall provide an interface for control data and multi-channel digital audio over OMNEO using dual Ethernet ports for redundant network connection, supporting RSTP and loop-through cabling, with automatic failover to an analog lifeline input. The amplifier shall have dual power supply inputs and power supplies. All amplifier channels shall have independent A/B zone outputs with support for class-A loudspeaker loops. All amplifier channels shall supervise the integrity of connected loudspeaker lines without interruption of audio distribution. The amplifier shall provide front-panel LED status indications for the network link, ground fault, power supplies and audio channels, and provide additional software monitoring and fault reporting features. The amplifier shall be rack mountable (1U) and feature software-configurable signal processing including level control, parametric equalization, limiting and delay for each channel. The amplifier shall be certified for EN 54-16 / ISO 7240-16, marked for CE and be compliant with the RoHS directive. Warranty shall be three years minimum. The amplifier shall be a Bosch PRA-AD608.

Regulatory information

Emergency standard certifications	
Europe	EN 54-16 (KIWA 0063)
International	ISO 7240-16
Maritime applications	DNV GL Type Approval
Mass Notifications Systems	UL 2572
Control Units and Accessories for Fire Alarm Systems	UL 864

Emergency standard compliance	
Europe	EN 50849
UK	BS 5839-8

Regulatory areas	
Safety	EN/IEC/CSA/UL 62368-1
Immunity	EN 55035 EN 50130-4

Regulatory areas	
Emissions	EN 55032 EN 61000-6-3 ICES-003 FCC-47 part 15B class A EN 62479
Environment	EN/IEC 63000
Railway applications	EN 50121-4

Installation/configuration notes

This is a professional product that should be installed, used and maintained by trained professionals only.

Parts included

Quantity	Component
1	Amplifier, 600W 8-channel
1	Set of 19"-rack mounting brackets (pre-mounted)
1	Set of screw connectors and cables
1	Quick Installation Guide
1	Safety information

Technical specifications

Amplifier outputs

Nominal output voltage	
100 V mode, 1 kHz, THD <1%, no load (VRMS)	100 VRMS
70 V mode, 1 kHz, THD <1%, no load (VRMS)	70 VRMS

Maximum output power* / RMS power*	
All channels combined (100 V mode, load 16.7 Ω | 70 V mode, load 8.3 Ω	
Maximum output power (W)	600 W
RMS power (W)	150 W
Channel 1 (100 V mode, load 16.7 ohm // 20 nF)	
Maximum output power (W)	600 W
RMS power (W)	150 W
Channel 1 (70 V mode, load 11.7 ohm // 20 nF)	
Maximum output power (W)	420 W
RMS power (W)	105 W
Other channels (100 V mode, load 33.3 ohm // 20 nF | 70 V mode, load 16.7 ohm // 20 nF)	
Maximum output power (W)	300 W
RMS power (W)	75 W
DC offset voltage (mV)	< 50 mV

*EIAJ test standard, 1 kHz, 8/40 ms

Signal processing per channel	
Master EQ	7-band
Level control (dB)	0 dB – -60 dB, mute
Level control resolution (dB)	1 dB
Audio delay (s)	0 s – 60 s
Audio delay resolution (ms)	1 ms
RMS power limiter	RMS power

Lifeline	
Input sensitivity (dBV) (100 V out)	0 dBV
Mute attenuation (dB)	> 80 dB
Minimum signal-to-noise ratio (dBA)	> 90 dBA

Acoustic

Full to no load regulation (dB) (20 Hz to 20.000 Hz)	< 0.2 dB
Frequency response (-3 dB) (Hz) (RMS power, +0.5)	20 Hz – 20,000 Hz
Total harmonic distortion + noise (%) (RMS power, 20 Hz to 20.000 Hz)	< 0.50%
Total harmonic distortion + noise (%) (6 dB below RMS power, 20 Hz to 20.000 Hz)	< 0.1%
Intermodulation distortion (19/20 kHz) (%) (6 dB below RMS power, 1:1)	0.10%
Minimum signal-to-noise ratio (dBA) (100 V mode, 20 Hz to 20.000 Hz)	110 dBA
Minimum signal-to-noise ratio (dBA) (70 V mode, 20 Hz to 20.000 Hz)	107 dBA
Crosstalk between channels (dBA) (100 Hz to 20.000 Hz)	< -84 dBA

Electrical

Loudspeaker load	
Loudspeaker load, both modes, all channels (maximum)	600 W
Minimum output load impedance (Ω), 100 V mode, all channels	16.70 Ω
Minimum output load impedance (Ω), 70 V mode, all channels	8.3 Ω

Maximum cable capacitance (uF), both modes, all channels	2 uF

Power transfer

Power supply input A/B	
Input voltage (VDC)	48 VDC
Input voltage (VDC) (tolerance)	44 VDC – 60 VDC
Power consumption, 48 V	
Power consumption (W), sleep mode, no supervision	6 W
Power consumption (W), snooze mode, supervision active	8.9 W
Power consumption (W), active mode, idle	56 W
Power consumption (W), active mode, low power	77 W
Power consumption (W), active mode, RMS power	246 W
Power consumption (W), per active port	0.4 W
Heat loss, including power supply	
Maximum heat loss (BTU/h), active mode, idle	225 BTU/h
Maximum heat loss (kJ/h), active mode, idle	237 kJ/h
Maximum heat loss (BTU/h), active mode, low power	308 BTH/h
Maximum heat loss (kJ/h), active mode, low power	325 kJ/h
Maximum heat loss (BTU/h), active mode, full power	412 BTH/h
Maximum heat loss (kJ/h), active mode, full power	434 kJ/h

Supervision

End-of-line detection mode	Pilot tone supervision, 25.5 kHz, 3 VRMS
Power supply input A/B	Undervoltage
Ground short detection (loudspeaker lines)	< 50 kohm
Amplifier channel redundancy switching	Internal spare channel
Amplifier channel load	Short circuit
Loudspeaker line redundancy switching	A/B group, Class-A loop
Controller continuity	Watchdog
Temperature	Overheat
Fan	Rotation speed
Network interface	Link presence

Network interface

Ethernet type	100BASE-TX; 1000BASE-T
Ethernet protocol	TCP/IP
Redundancy	RSTP
Control/Audio protocol	OMNEO
Latency (ms) of the network audio	10 ms
Audio encryption	AES 128
Security	TLS
Number of Ethernet ports	2

Reliability

Mean time between failures (MTBF) (h) (calculated according to Telcordia SR-332 Issue 3)	250,000 h

Environmental

Operating temperature (°C)	-5 °C – 50 °C
Operating temperature (°F)	23 °F – 122 °F
Storage temperature (°C)	-30 °C – 70 °C
Storage temperature (°F)	-22 °F – 158 °F
Operating relative humidity, non-condensing (%)	5% – 95%
Air pressure (hPa)	560 hPa – 1,070 hPa
Installation altitude (m)	-500 m – 5,000 m
Installation altitude (ft)	1,640 ft – 16,404 ft
Operating vibration	
Amplitude (mm)	< 0.70 mm
Acceleration (G)	< 2 G
Bump (transport) (G)	< 10 G (IEC 60068-2-27)
Fan airflow	Front to sides/rear
Fan noise, 1 m distance (dBSPLA). idle condition	< 30 dBSPLA
Fan noise, 1 m distance (dBSPLA), RMS power	< 53 dBSPLA

Mechanical

Dimensions (H x W x D) (mm)	44 mm x 483 mm x 400 mm
Dimensions (H x W x D) (in)	1.75 in x 19 in x 15.7 in
Rack unit (U)	1 U
IP rating	IP30
Material	Steel; Zamac
Color (RAL)	RAL 9017 Traffic black
Weight (kg)	8.80 kg
Weight (lb)	19.40 lb

Ordering information

PRA-AD608 Amplifier, 600W 8-channel
Network-connected, DC-powered, 8-channel, 600 W power amplifier with integrated spare channel (max. 600 W) and DSP functions.
Order number **PRA-AD608 | F.01U.325.044 F.01U.399.143**

Accessories

PRA-EOL End-of-line device
Device for loudspeaker line integrity supervision in Public Address and Voice Alarm applications.
Order number **PRA-EOL | F.01U.325.045**

PRA-EOB End-of-branch device
PRAESENSA device for supervision of loudspeaker branches.
Order number **PRA-EOB | F.01U.428.066**

Services

EWE-PRAMP8-IW 12 mths wrty ext Praes Amp 8 ch
12 months warranty extension
Order number **EWE-PRAMP8-IW | F.01U.387.317**

https://www.keenfinity-group.com

© Electro Voice Dynacord 2026