ADORN User Guide

Copyright © 2026 Martin Audio Limited

Publication date 2026-02-19

MARTIN AUDIO
LONDON

Table of Contents

Introduction 4
- Models in the range 4
- 70/100 V line transformer 4
- Low impedance mode 4
- Protection 4
- Weather resistance 4
- Ceiling speaker safety standards 4

ADORN on-wall speakers 5
- A40 and A40T 5
- A55 and A55T 5
- A80T 6

ADORN ceiling speakers 7
- ACS-40TS 7
- ACS-55TS 7
- ACS-55T 8

ADORN pendant speaker 9
- ACP-55T 9

Subwoofers 10

ADORN accessories 11
- Weatherised connector cover kit AIPKIT 11
- Weatherised connector cover kit ASF09007 11
- Wall bracket ASM10001/2 11
- Wall bracket WB6/8 11
- Ceiling bracket CDDCB5 12
- Ceiling bracket CDDCB6/8 12
- Tile rails 12
- C-bracket 12
- Suspension cable CK3 12

70/100 V line systems 14
- A40T and ACS-40TS 14
- A55T, ACS-55T, ACS-55TS and ACP-55T 14
- A80T 14
- Amplification for 70/100 V line systems 14

Connecting on-wall speakers 15
- To connect ADORN on-wall speakers 15

Connecting ceiling and pendant speakers 16
- To connect ceiling and pendant speakers 16

Wall mounting 17
- Portrait or landscape 17
- To wall mount A40, A40T, A55 and A55T 17
- To wall mount A80T 20

Ceiling mounting on-wall speakers 23
- To mount A40, A40T, A55 and A55T on the ceiling 23
- To mount the A80T on the ceiling 25

Installing ceiling speakers 27
- Cutting ceiling holes 27
- Suspended ceilings 27
- To prepare a suspended ceiling 27
- Installing a ceiling speaker 27

To install a ceiling speaker 28
To fit the grille 29
Safety information for ceiling speakers 30
Compliance with safety standards 30
Safety standards 30
Fitting pendant speakers 31
Fitting the pendant speaker grille 31
Amplifiers 32
VIA amplifiers 32
iKON amplifiers 32
Amplifiers for 70/100 V systems 33
ADORN amplifier compatibility 34
A80T amplifier compatibility 34
Amplifier compatibility legend 35
System controllers 36
DX0.4 and DX0.6 presets 36
Using other controllers 36
System design 38
To download Display 3 38
EASE and EASE Focus files 38
3D SketchUp files 38
Revit families for ADORN 38
DWG files 39
Painting speakers 40
Grille removal 40
Grille refitting 41
Specifications 42
On-wall speakers A40 and A40T 42
On-wall speakers A55 and A55T 42
On-wall speaker A80T 43
Ceiling speaker ACS-40TS 43
Ceiling speaker ACS-55T 44
Ceiling speaker ACS-55TS 44
Pendant speaker ACP-55T 45
Technical drawings 46
ADORN spare parts 59
Troubleshooting 60
Technical support 60
Service 60
Warranty 60
Unpacking 60
Recycling 60

Introduction

The Martin Audio ADORN series consists of ultra-compact, discreet, easy to deploy speakers for a wide range of commercial integration projects. They deliver superior sound quality and the signature Martin Audio tonal characteristics at a great price point. ADORN is an ideal partner with larger Martin Audio systems in venues with a variety of zones, providing a seamless transition between zones and retaining the same sonic performance and tonal quality.

Models in the range

The ADORN range consists of five on-wall speakers, four in-ceiling speakers and one pendant speaker.

The on-wall speakers are available in black (RAL 9005) or white (RAL 9016).

A40	Black 4" (100 mm) on-wall speaker
A40-W	White 4" (100 mm) on-wall speaker
A40T	Black 4" (100 mm) on-wall speaker with transformer
A40T-W	White 4" (100 mm) on-wall speaker with transformer
A55	Black 5.25" (135 mm) on-wall speaker
A55-W	White 5.25" (135 mm) on-wall speaker
A55T	Black 5.25" (135 mm) on-wall speaker with transformer
A55T-W	White 5.25" (135 mm) on-wall speaker with transformer
A80T	Black 8" (203 mm) on-wall speaker with transformer
A80T-W	White 8" (203 mm) on-wall speaker with transformer

The in-ceiling speakers have bezel-free grilles for a clean look and are available in white only (RAL 9016):

ACS-40TS-W	White 4” (100 mm) ceiling speaker with transformer and shallow back can
ACS-55TS-W	White 5.25" (135 mm) ceiling speaker with transformer and shallow back can
ACS-55T-W	White 5.25" (135 mm) ceiling speaker with transformer and deep back can

The pendant model is available in black (RAL 9005) or white (RAL 9016):

ACP-55T	Black 5.25" (135 mm) pendant speaker with transformer
ACP-55T-W	White 5.25" (135 mm) pendant speaker with transformer

70/100 V line transformer

All ADORN speakers, except the A40 and A55, include a 70/100 V line transformer. This transformer has a dial that allows you to select the appropriate power output or to switch off the transformer by selecting low impedance. For further details, see 70/100 V line systems (page 14).

Low impedance mode

In low impedance mode, all ADORN speakers, except the 8-ohm A80T, have an impedance of 16 ohm. If your amplifier has a 2 ohm load capability, you can drive up to eight 16 ohm speakers from a single channel.

The A40 and A55 models don't have a transformer, so these models always have an impedance of 16 ohm.

Note that we don't have a version of the A80T without the transformer, but you can use an A80T and set it to low impedance mode. In this case the A80T has an impedance of 8 ohm.

Protection

All models have built-in independent protection for the high and low frequency drivers to ensure reliable operation in the event of an overload condition.

Weather resistance

You can upgrade any of the on-wall models to an IP rating of IP54 with the addition of an optional weatherised connector cover accessory.

Ceiling speaker safety standards

The ADORN ceiling speakers are certified compliant with **UL 1480A** and **UL 2043** safety standards. The deep-can model ACS-55T is also certified compliant with **CSA C22.2 No. 205-17**.

The pendant model ACP-55T is certified compliant with **UL 1480A** and **CSA C22.2 No. 205-17** safety standards.

For further details, see Safety information for ceiling speakers (page 30).

ADORN on-wall speakers

A40 and A40T

The A40 is a two-way passive speaker with an elegant design that is perfect for architectural interiors that require high-fidelity sound from an unobtrusive, ultra-compact enclosure. Comprising a 4” (100 mm) LF driver and a 0.75” (19 mm) silk-dome HF driver on a 110° x 80° horn, it handles 40 W AES, 160 W peak and can produce a maximum SPL of 109 dB (115 dB with crest factor 4).

It is available in black (RAL 9005) or white (RAL 9016), or you can paint (page 40) the ABS enclosure. You can wall-mount the speaker in either portrait or landscape orientation using the supplied bracket (page 11). However, if mounted in landscape, the dispersion will be affected, as the driver cannot be rotated. For details. see Portrait or landscape (page 17).

The A40T model features a built-in 70/100 V multi-tap transformer (page 14) for line operation.

With the A40 (or the A40T in low impedance mode), the nominal impedance is 16 ohm. You can drive multiple speakers in parallel from a single channel of a low impedance amplifier (page 32) such as the Martin Audio VIA2004.

For outdoor use, you can upgrade the speaker to an IP rating of IP54 by adding a waterproof connector cover (page 11) accessory (sold separately).

The A40 and A40T are priced individually but sold and packaged in pairs.

A55 and A55T

The A55 features a 5.25” (135 mm) LF driver and a 0.75” (19 mm) silk-dome HF driver on a 110° x 80° horn. With a power handling of 50 W AES, 200 W peak, and can produce a maximum SPL of 113 dB (119 dB with crest factor 4), it is designed for background and foreground applications that call for premium sound quality and high levels from a visually discreet enclosure.

It is available in black (RAL 9005) or white (RAL 9016), or you can paint (page 40) the ABS enclosure. You can wall-mount the speaker in either portrait or landscape orientation using the supplied bracket (page 11). However, if mounted in landscape, the dispersion will be affected, as the driver cannot be rotated. For details. see Portrait or landscape (page 17).

The A55T model features a built-in 70/100 V multi-tap transformer (page 14) for line operation.

With the A55 (or the A55T in low impedance mode), the nominal impedance is 16 ohm. You can drive multiple speakers in parallel from a single channel of a low impedance amplifier (page 32) such as the Martin Audio VIA2004.

For outdoor use, you can upgrade the speaker to an IP rating of IP54 by adding a waterproof connector cover (page 11) accessory (sold separately).

The A55 and A55T are priced individually but sold and packaged in pairs.

A80T

The ADORN A80T is a two-way passive speaker with an elegant design that is perfect for architectural environments that require high fidelity sound from an unobtrusive, compact enclosure. Comprising an 8” (203 mm) LF driver and a 1” (25 mm) polymer dome HF compression driver on a 90° x 50° horn, it handles 200 W AES, 800 W peak and can produce a maximum SPL of 120 dB (126 dB with crest factor 4). It has a smooth frequency response and strong bass reproduction that extends down to 63 Hz.

It is available in black (RAL 9005) or white (RAL 9016), or you can paint (page 40) the speaker to match your décor. You can wall-mount the speaker in either portrait or landscape orientation using the supplied WB6/8 bracket (page 11). However, if mounted in landscape, the dispersion will be affected, as the driver cannot be rotated. For details. see Portrait or landscape (page 17).

The A80T includes a high-quality 70/100 V multi-tap transformer (page 14) for line operation, with transformer taps selected by a rotary switch. Alternatively, you can switch off the transformer by choosing low impedance. In this case the impedance is 8 ohm.

For amplifiers (page 32), the VIA2502 or VIA5004 (or VIA5002 for 70V/100V line) in combination with a Martin Audio DX0.4 or DX0.6 controller will be perfect partners for small-scale efficient installations. Combine these amps with the DX4.0 controller for larger more complex installations managed by Martin Audio’s Vu-Net control software.

For full bandwidth protection, the low and high-frequency sections are individually protected against overload.

For outdoor use, you can upgrade the speaker to an IP rating of IP54 by adding a waterproof connector cover (page 11) accessory (sold separately).

The A80T is priced, sold and packaged individually.

ADORN ceiling speakers

ACS-40TS

The ACS-40TS ceiling speaker has a 4” (100 mm) LF driver and a 0.75” (19 mm) silk-dome tweeter. It delivers a peak SPL of 108 dB (114 dB with crest factor 4) and has a high-fidelity sonic character ideal for both music and speech reproduction. The ported design delivers strong bass that extends down to 73 Hz.

The very wide 180° conical coverage of the ACS-40TS makes it particularly suitable for low ceilings and reduces the number of speakers required for even coverage — leading to a reduction in installation cost. It features a shallow back can for installation in ceilings with limited cavity depth. ACS-40TS is certified compliant with UL 1480A and UL 2043 safety standards.

The ACS-40TS is available in white only (RAL 9016). It is priced individually and sold and packaged in pairs (model ACS-40TS-W). A logo-free version is available for orders of 200 or more (model ACS-40TS-W-NL).

ACS-55TS

The ACS-55TS ceiling speaker has a 5.25” (135 mm) LF driver and a 0.75” (19 mm) silk-dome tweeter. It delivers a peak SPL of 113 dB (119 dB with crest factor 4) and has a high-fidelity sonic character ideal for both music and speech reproduction. The ported design delivers strong bass that extends down to 79 Hz.

The wide 150° conical coverage of the ACS-55TS makes it particularly suitable for low ceilings and reduces the number of speakers required for even coverage — leading to a reduction in installation cost. It features a shallow back can for installation in ceilings with limited cavity depth. ACS-55TS is certified compliant with UL 1480A and UL 2043 safety standards.

The ACS-55TS is only available in white (RAL 9016). It is priced individually and sold and packaged in pairs. A version without a logo on the grille is available with a minimum order size of 200.

The ACS-55TS is available in white only (RAL 9016). It is priced individually and sold and packaged in pairs (model ACS-55TS-W). A logo-free version is available for orders of 200 or more (model ACS-55TS-W-NL).

ACS-55T

The ACS-55T has a 5.25” (135 mm) LF driver and a 0.75” (19 mm) silk-dome tweeter. It delivers a peak SPL of 113 dB (119 dB with crest factor 4) and has a high-fidelity sonic character ideal for both music and speech reproduction. The ported bass reflex design and deep back can with generous internal volume maximise low frequency output and deliver strong bass that extends down to 62 Hz.

The wide 150° conical coverage of the ACS-55T reduces the number of speakers required for even coverage — leading to a reduction in installation cost. ACS-55T is certified compliant with UL 1480A, UL 2043, and CSA C22.2 No. 205-17 safety standards.

The ACS-55T is available in white only (RAL 9016). It is priced individually and sold and packaged in pairs (model ACS-55T-W). A logo-free version is available for orders of 200 or more (model ACS-55T-W-NL)

ADORN pendant speaker

ACP-55T

The ACP-55T pendant speaker features a 5.25” (135 mm) LF driver and a 0.75” (19 mm) silk-dome tweeter, capable of producing a peak SPL of 109 dB (115 dB with a crest factor of 4). It provides superb sound quality for both music and speech reproduction. The stylish pendant enclosure includes a single-point mounting system and provision for attaching a safety cable.

The consistent and wide 150° conical coverage of the ACP-55T reduces the number of speakers required for even coverage — leading to a reduction in installation cost. ACP-55T is certified compliant with UL 1480A and CSA C22.2 No. 205-17 safety standards.

The ACP-55T is available in black (RAL 9005) or white (RAL 9016). It is priced, sold and packaged individually (model ACP-55T for black, ACP-55T-W for white).

Subwoofers

For a full range music system, you can supplement ADORN speakers with one or more subwoofers from the Martin Audio SX or BlacklineQ series. You could use any of our subwoofers, but the combinations that make sense are as follows:

	A40 and A55	A80T
SX110	Yes	
SX210	Yes	Yes
Q210	Yes	Yes
SX112	Yes	Yes
SX212	Yes	Yes
SX115		Yes
SXC115		Yes
SX215		Yes

For details of the SX and BlacklineQ subwoofers, see our website martin-audio.com.

With a subwoofer, you also need a system controller (page 36), and you may need an additional amplifier. For details, see Amplifiers (page 32).

ADORN accessories

Weatherised connector cover kit AIPKIT

The optional AIPKIT weatherised connector cover kit upgrades the A40, A40T, A55 or A55T to an IP rating of IP54 for outdoor use. The kit includes a connection cover, screws, rubber gasket seal and cable gland. This kit is available in black (AIPKIT) and white (AIPKIT-W).

The input cable hole is on the left and there is a knockout hole on the right for an optional daisy chain cable.

The cable gland supports cables with diameters from 6 to 10 mm (0.24 to 0.39 in).

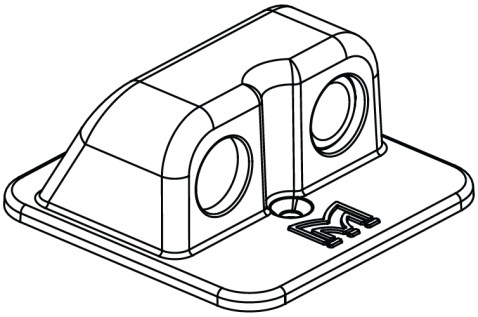

Weatherised connector cover kit ASF09007

The optional ASF09007 weatherised connector cover kit upgrades the A80T to an IP rating of IP54 for outdoor use. The kit includes a connection cover, rubber gasket seal, cable gland and screws. This kit is only available in black.

The input cable hole is on the left and there is a knockout hole on the right for an optional daisy chain cable.

The cable gland supports cables with diameters from 4.5 to 10 mm (0.18 to 0.39 in).

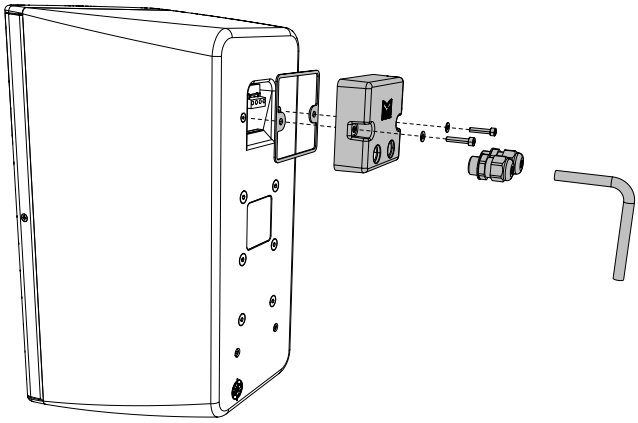

Wall bracket ASM10001/2

We supply the A40, A40T, A55 and A55T with a weatherised bracket that attaches to the wall (page 17) and provides tilt and pan (replacement part ASM10002 for black and ASM10001 for white).

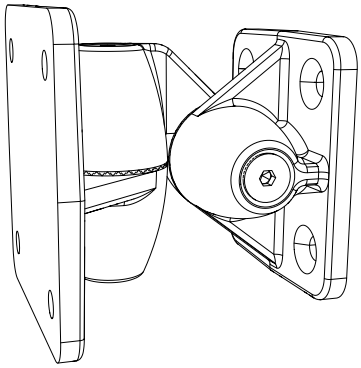

Wall bracket WB6/8

We supply the A80T with a weatherised bracket that attaches to the wall (page 20) and provides tilt and

pan (replacement part WB6/8B for black and WB6/8W for white).

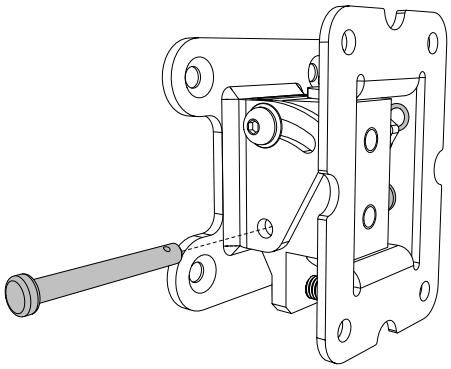

Ceiling bracket CDDCB5

This optional bracket allows you to ceiling mount (page 23) the A40, A40T, A55 and A55T. This bracket is weatherised for outdoor use and is available in black (CDDCB5B) and white (CDDCB5W). This ceiling bracket connects to the wall bracket supplied with the speaker. Note that if you ceiling mount these speakers, you can only install in landscape, and this will impact the dispersion of the speaker (page 17).

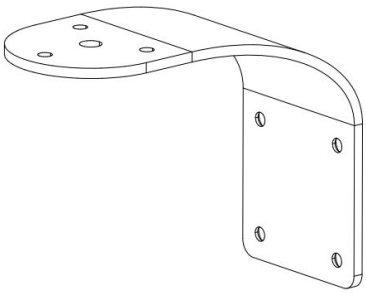

Ceiling bracket CDDCB6/8

This optional bracket allows you to ceiling mount (page 25) the A80T. This bracket is weatherised for outdoor use and is available in black (CDDCB6/8B), white (CDDCB6/8W) and custom RAL colours (CDDCB6/8RAL). Note that if you ceiling mount the A80T, you can only install in landscape, and this will impact the dispersion of the speaker (page 17).

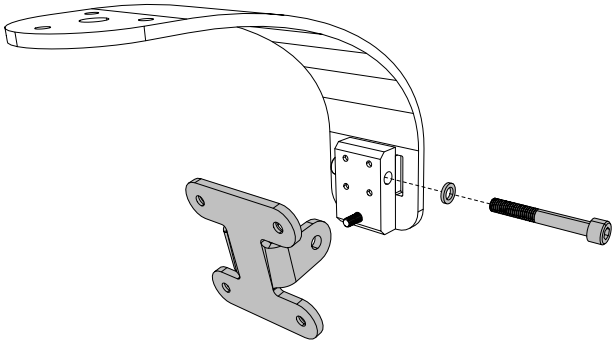

Tile rails

We supply each ADORN ceiling speaker with two tile rails for installing into suspended ceilings (page 27).

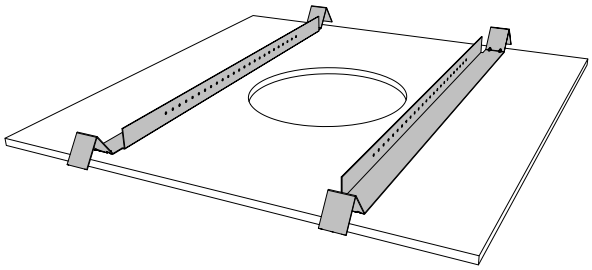

C-bracket

We supply each ADORN ceiling speaker with an appropriately sized C-bracket for installing into suspended ceilings (page 27).

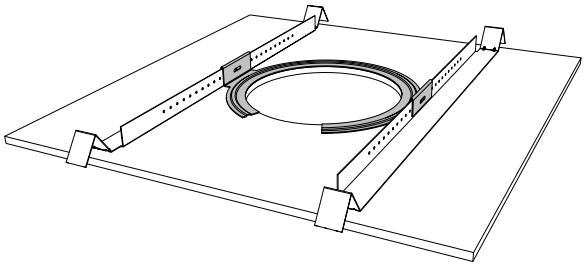

Suspension cable CK3

CK3 is an optional 3 metre (10 ft) steel suspension cable for suspending the ADORN pendant speaker ACP-55T. This accessory includes a pre-crimped snap-on hook and an express lock for cable length adjustment.

CK3 is priced individually but sold and packaged in pairs.

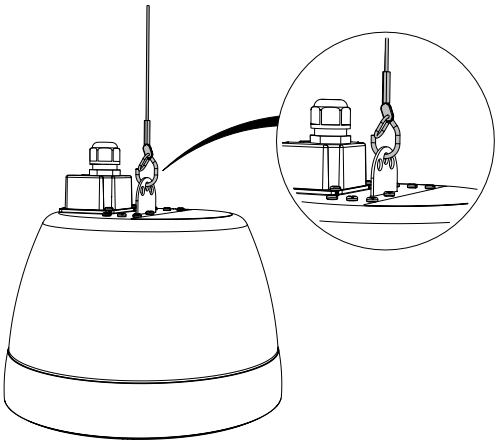

70/100 V line systems

For 70/100 V line systems, you select the appropriate tap using a rotary switch:

- For ADORN on-wall speakers A40T, A55T and A80T, the rotary switch is on the back.

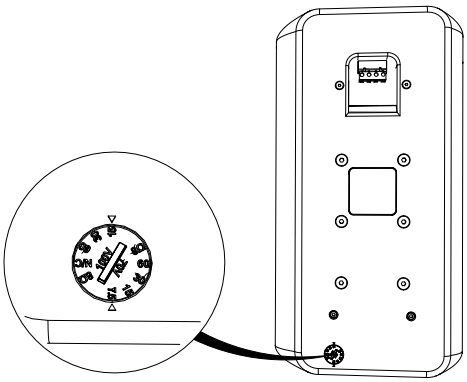

- For ADORN ceiling and pendant models, the rotary switch is on the front baffle.

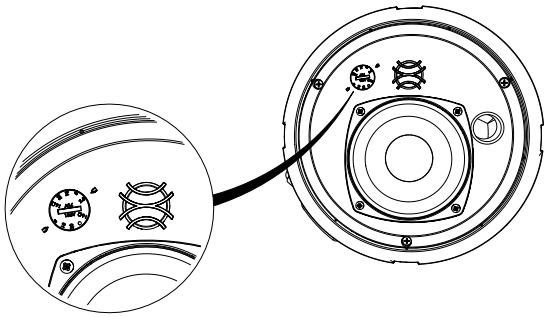

The sum of the speaker taps must be less than the rated power output of the amplifier channel.

A40T and ACS-40TS

Position	70 V	100 V
1	2.5 W	5 W
2	5 W	10 W
3	10 W	20 W
4	20 W	Not used
5	16 ohm	16 ohm

A55T, ACS-55T, ACS-55TS and ACP-55T

Position	70 V	100 V
1	3.75 W	7.5 W
2	7.5 W	15 W
3	15 W	30 W
4	30 W	Not used
5	16 ohm	16 ohm

A80T

Position	70 V	100 V
1	7.5 W	15 W
2	15 W	30 W
3	30 W	60 W
4	60 W	Not used
5	8 ohm	8 ohm

Amplification for 70/100 V line systems

For a 70/100 V line system, we recommend the VIA5002. For details, see Amplifiers (page 32).

Connecting on-wall speakers

ADORN on-wall speakers have a pluggable low-profile four-pole Euroblock (Phoenix-style) 12 A connector with screw terminals; for replacements see ADORN spare parts (page 59). The connector accepts cables up to 2.5 mm^2 (AWG 14). If you are following first and second fix conventions, wire the connectors during first fix, then install the speakers and plug in the connectors during second fix.

> Previous versions of A40, A40T, A55 and A55T have two spring-loaded push terminals, one red and one black, rather than a Phoenix-style connector.

To connect ADORN on-wall speakers

1. With the speaker in portrait, hold the lower section of the connector (the part that sticks out from the rear panel) and ease it downwards until it unplugs from the upper section.

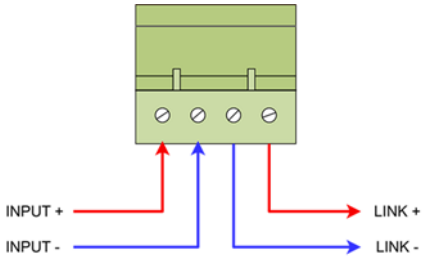

2. Wire the speaker cable to the connector using the two screw fittings on the left:
   - Connect positive from the amplifier to the leftmost pin (labelled **INPUT +**).
   - Connect negative from the amplifier to the second pin (labelled **INPUT –**).
3. To daisy-chain the amplifier output to further speakers on the same circuit, use the two screw fittings on the right:
   - Connect negative for the next speaker to the third pin (labelled **LINK –**).
   - Connect positive for the next speaker to the rightmost pin (labelled **LINK +**).
4. Plug the connector back into the speaker.

Connecting ceiling and pendant speakers

The ADORN ceiling and pendant speakers have a connection cover to keep the cable connections safe and help prevent accidental disconnections.

To connect ceiling and pendant speakers

1. Strip about 10 mm of insulation from speaker cable ends.
2. If you have stranded cables, twist the ends or attach crimped bootlace ferrules.
3. Loosen the four screws in the connection cover and remove this cover. You can remove the cover without removing the screws.
4. Pass the cable through the gland from the outside.
5. Connect the speaker cables to the four-pin ceramic terminal block using the cross-head screw fittings.
   - Connect positive (+) from the amplifier to the leftmost pin.
   - Connect negative (–) from the amplifier to the second pin.
   - If daisy-chaining, connect negative (–) for the next speaker to the third pin.
   - If daisy-chaining, connect positive (+) for the next speaker to the rightmost pin.
6. Replace the connector cover making sure there's no strain on the connections.
7. Tighten the gland to seal the connection.

Wall mounting

We supply all ADORN on-wall speakers with wall brackets:

- For the A40, A40T, A55 and A55T, the bracket has three parts: a part that attaches to the wall, a part that attaches to the cabinet and a link section that joins the two. This link section allows you to adjust the speaker both horizontally and vertically.

  If you only need to adjust the speaker in one plane (horizontally or vertically), you can leave out the link section. In this case, the speaker will fit a little closer to the wall.
- For the A80T, the bracket has two parts and allows you to adjust the speaker horizontally and vertically.

Portrait or landscape

Whenever possible, install ADORN on-wall speakers in portrait. If you install in landscape, the dispersion will be impacted because you can't rotate the driver:

Speaker	Dispersion in portrait	Dispersion in landscape
A40, A40T, A55, A55T	110° H x 80° V	80° H x 110° V
A80T	90° H x 50° V	50° H x 90° V

Note that you if you ceiling-mount ADORN on-wall speakers (page 23), you can only install in landscape and so the dispersion will always be impacted.

To wall mount A40, A40T, A55 and A55T

1. Decide whether you need to adjust the installed speaker horizontally, vertically or in both planes. This decision will determine whether you need to include the link section and which way round to attach the bracket.
2. Separate the wall section from the rest of the bracket using a 4 mm hex key (H4).
   - The wall section is larger and has fixing holes spaced 45 mm (1.77 in) apart.
   - The cabinet section is smaller and has countersunk holes spaced 35 mm (1.38 in) apart.

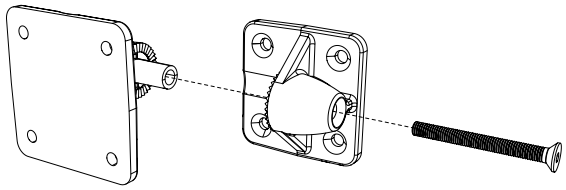

3. Remove the link section from the cabinet section using a 4 mm hex key (H4).

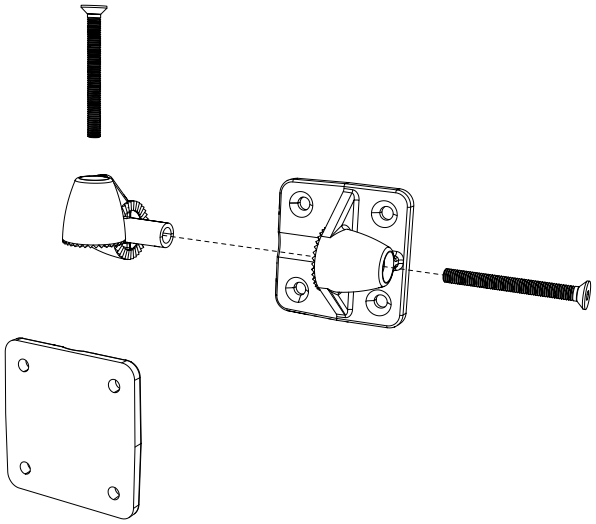

4. Attach the wall section to the wall. The wall section has four holes with diameter 5.2 mm (0.2 in).

   So that the installation is safe and secure, you must use fixings that are appropriate for the wall surface and the weight of the speaker.

   If you need to adjust the speaker in both planes (or horizontally only), fit the bracket to the wall with the peg upwards, as shown below.

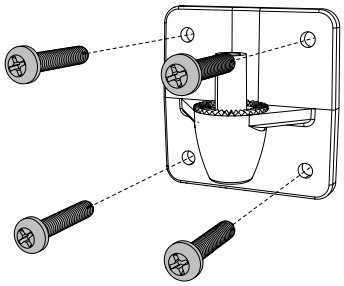

If you only need to adjust the speaker vertically, fit the bracket to the wall with the peg sideways, as shown below.

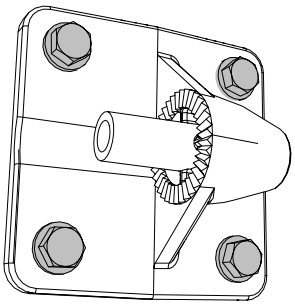

5. Remove four screws (M5) from the back of the cabinet using a 3 mm hex key (H3) and attach the cabinet bracket section using these screws.

   If you need to adjust the speaker in both planes (or vertically only), fit the bracket with the opening sideways, as shown below for portrait:

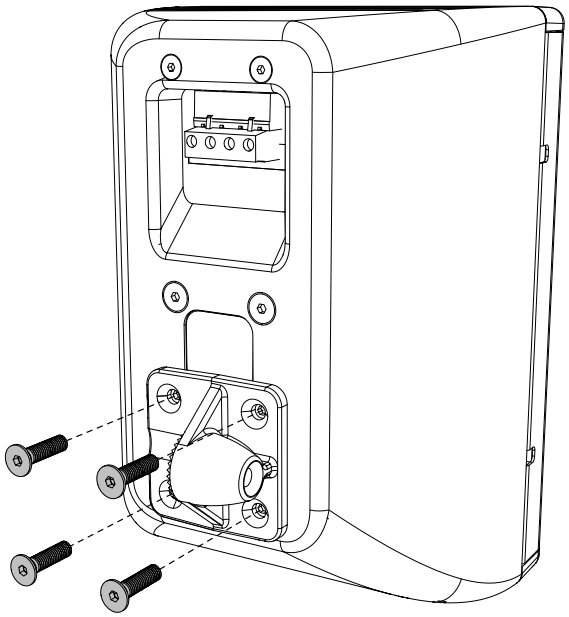

For landscape, use the same arrangement with the opening sideways, as shown below:

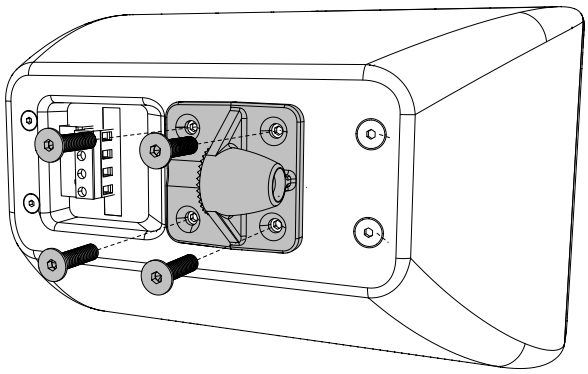

If you only need to adjust the speaker horizontally, fit the bracket with the opening downwards. This applies whether the speaker is in portrait or landscape.

6. If you need to adjust in both planes, fit the link section to the cabinet section, as shown below for portrait:

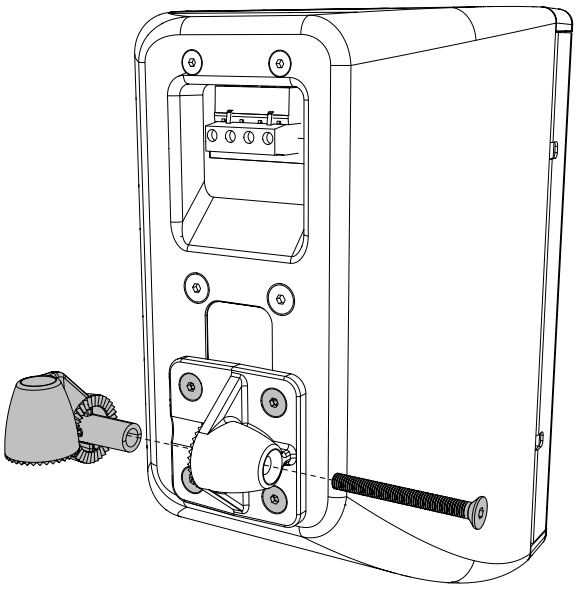

For landscape, use the same arrangement, as shown below:

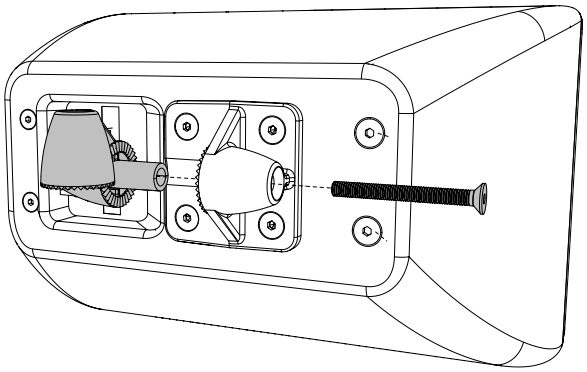

7. Bolt this link section in place, as shown below for portrait:

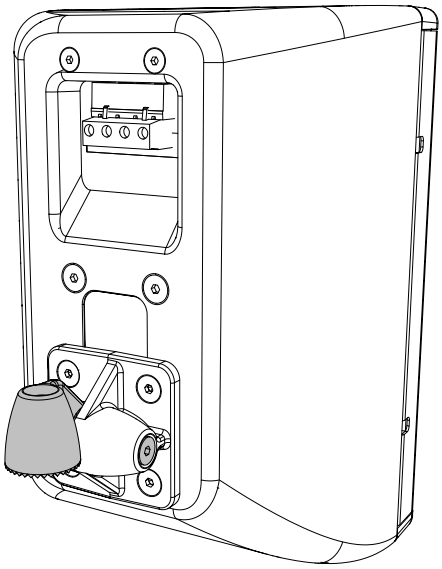

For landscape, use the same arrangement, as shown below:

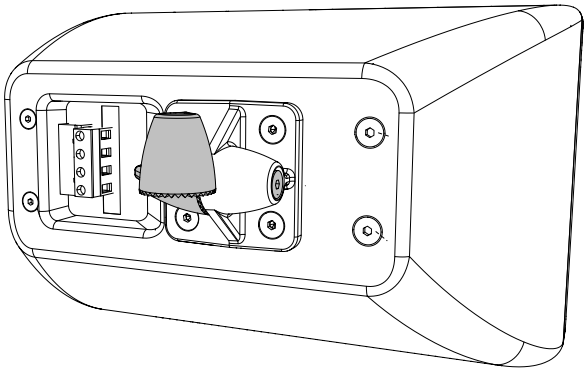

8. Lift the speaker up to the wall bracket section.

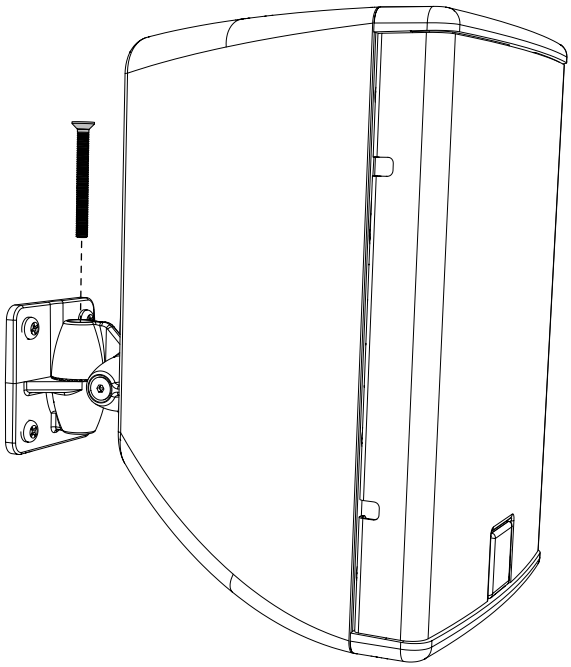

If the wall bracket peg is upwards, the other section will hook securely in place freeing up your hands. You can then fit the pivot bolt.

If the wall bracket peg is sideways (allowing only vertical adjustment), slide the two sections of the bracket together and support the speaker with one hand while you insert the pivot bolt with your other hand.

9. Tighten the bolt but leave it a little loose to allow for final adjustment. The radial teeth of the bracket allow you to adjust the speaker in increments of approximately 10°. If the fitting includes the link section, loosen the other fitting slightly, so that you can adjust in the other plane.
10. Connect the speaker cables (page 15).
11. Check the coverage using an audio source and make final adjustments to the vertical and horizontal positions.
12. When you have found the best position, tighten the vertical and horizontal bolts.

To wall mount A80T

1. Remove the R-clip and washer from the lower pin.

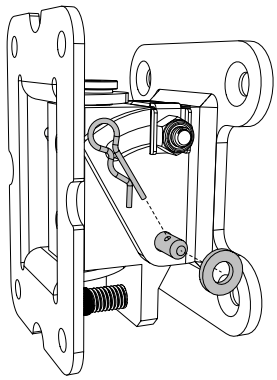

2. Remove the lower pin and separate the two halves of the bracket (don't remove the upper nut and bolt in the curved slot).

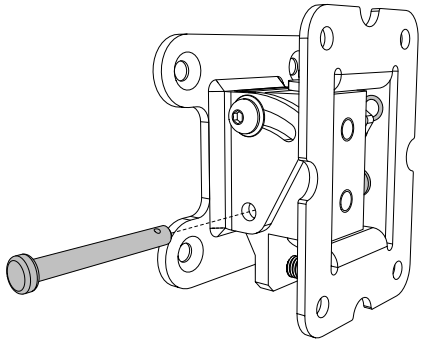

3. Attach the wall section to the wall. Note that the wall section is rectangular while the cabinet section is square. The grub screw needs to be at the bottom and the sideways notch at the top.

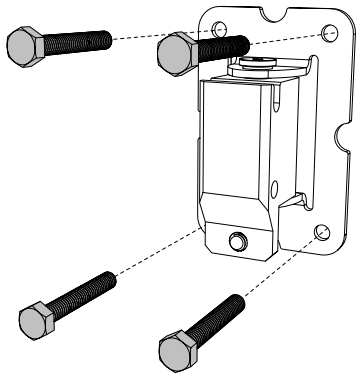

So that the installation is safe and secure, you must use fixings that are appropriate for the wall surface and the weight of the speaker.

The wall section has four holes with diameter 7 mm.

4. Remove (and keep) four screws from the back of the cabinet (using a 4 mm hex key). For landscape, remove the four screws in the middle of the cabinet. For portrait, remove the lower four screws.

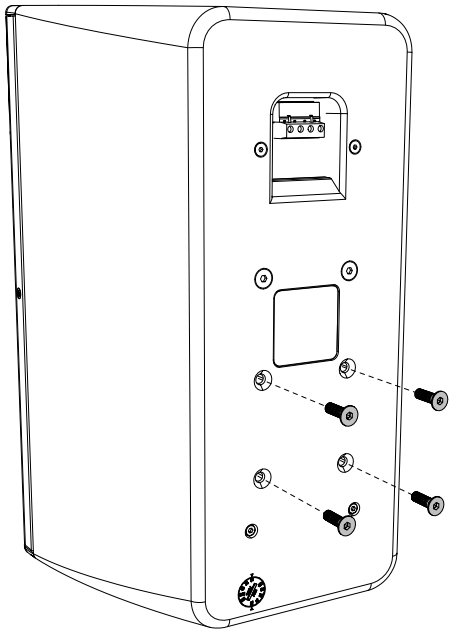

5. Attach the cabinet section using the screws you removed from the cabinet. The bolt needs to be horizontal as shown below.

> Don’t use the longer screws supplied with the wall bracket. These are for CDD-LIVE only.

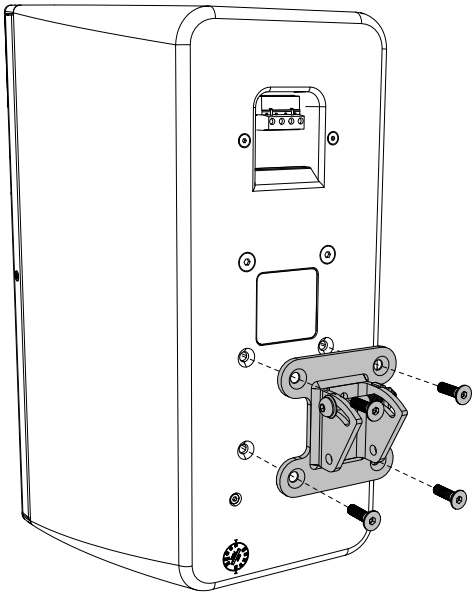

> If you attach a safety tether to one of the two remaining holes in the cabinet, the M6 screw must be at least 25 mm (1 in) long.

6. Lift the speaker up to the bracket and hook the horizontal bolt into the notch of the wall section.

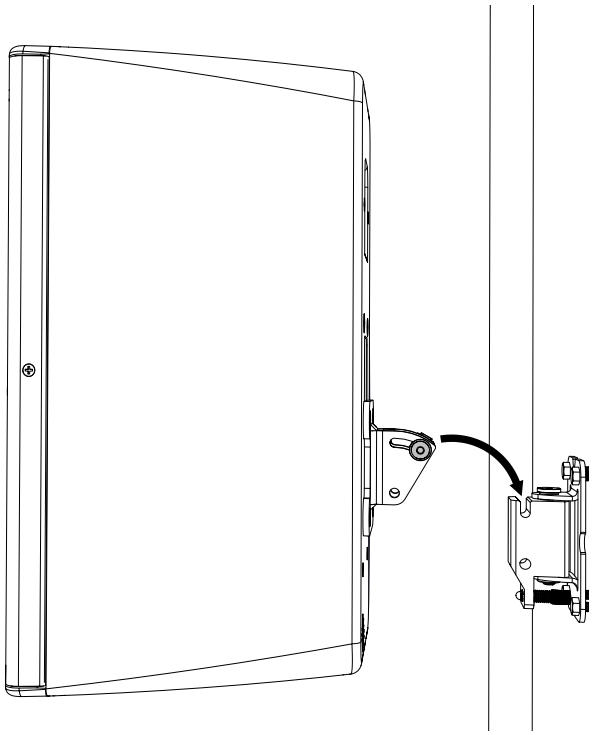

The bracket will now hold the speaker in place.

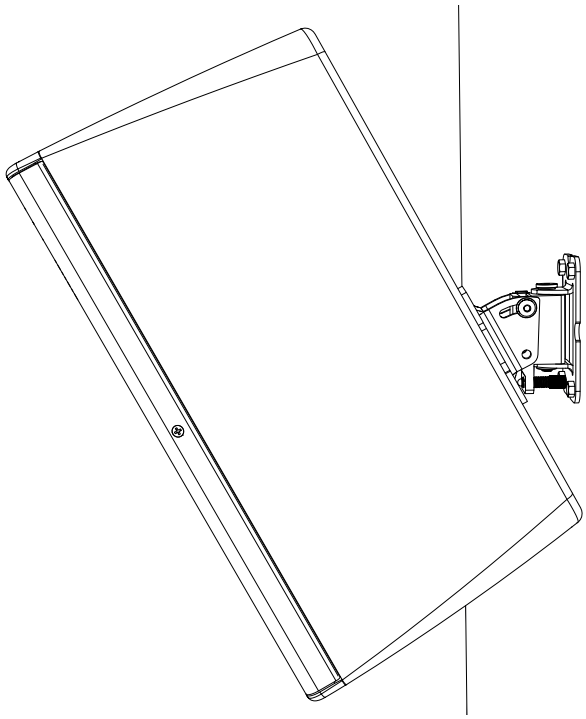

> ⚠ When working at height, you must use appropriate safety measures.
>
> A scaffold tower or lifting platform will allow you to use both hands safely.

7. Replace the lower pin.

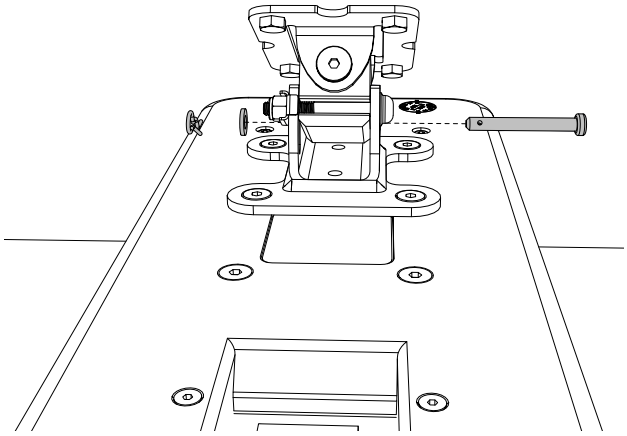

8. Replace the washer and R-clip.

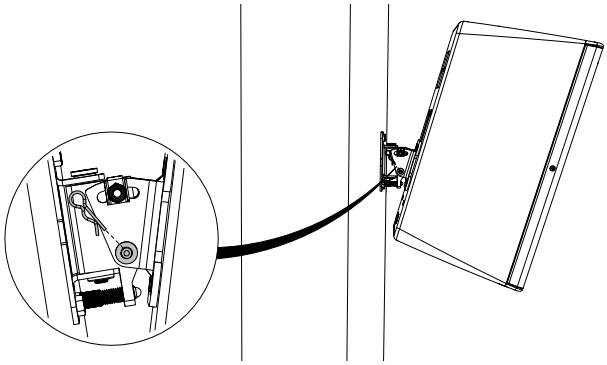

9. Loosen the vertical bolt (using an M5 hex key) and adjust the speaker horizontally on this bolt.

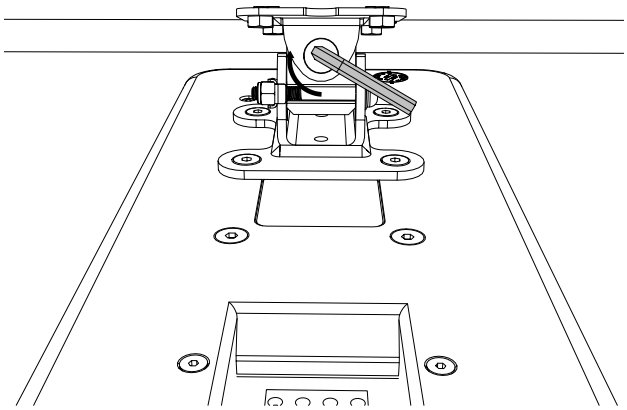

10. Loosen the upper horizontal bolt.

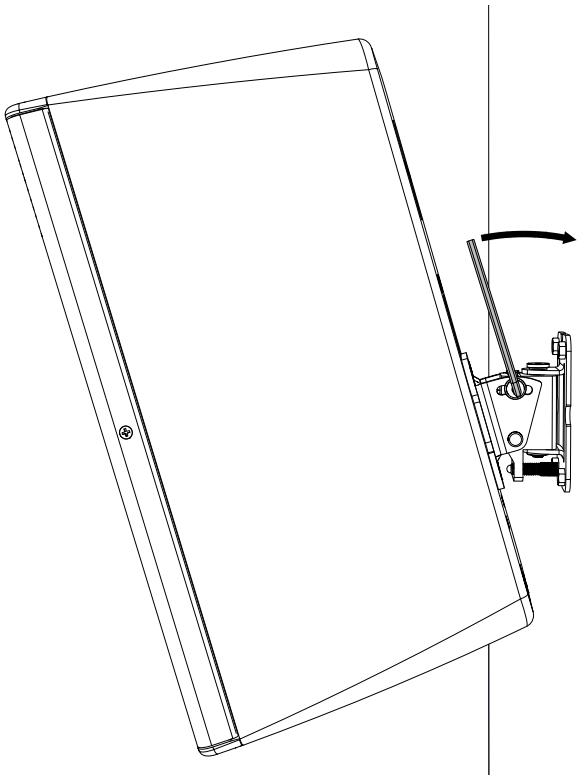

11. Adjust the vertical position using the grub screw.

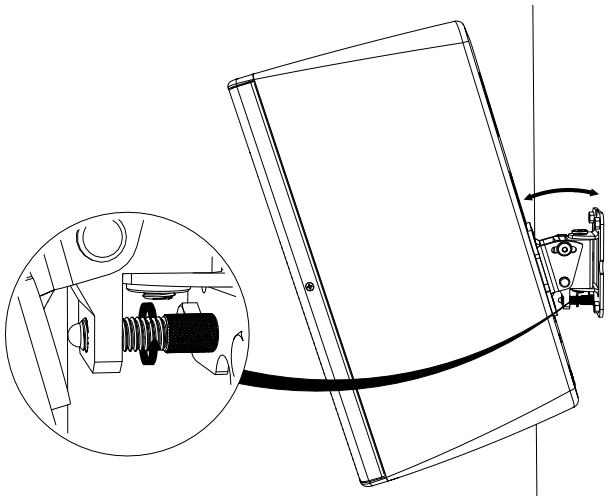

12. Connect the speaker cables (page 15).
13. Check the coverage using an audio source and make final adjustments to the vertical and horizontal positions.
14. When you have found the best position, tighten the vertical and horizontal bolts.

Ceiling mounting on-wall speakers

To mount ADORN on-wall speakers on the ceiling, use optional ceiling brackets:

- For A40, A40T, A55 and A55T use bracket CDDCB5.
- For A80T use bracket CDDCB6/8.

To mount A40, A40T, A55 and A55T on the ceiling

If you mount these speakers on the ceiling, you can only install in landscape, and this will impact the dispersion. For details, see Portrait or landscape (page 17).

1. Disassemble the wall bracket (supplied with the speaker). This is because ceiling bracket CDDCB5 connects to the wall bracket rather than the speaker.

   For details of the wall bracket, see Wall mounting (page 17).

2. Bolt the wall section of the wall bracket to the ceiling bracket using the four M5 screws, plain washers and Nyloc nuts supplied with the ceiling bracket.

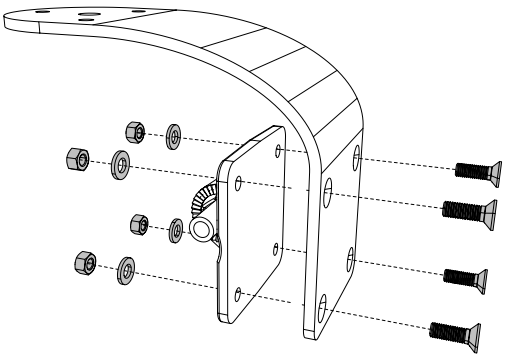

Fit the wall bracket with the peg sideways as shown below:

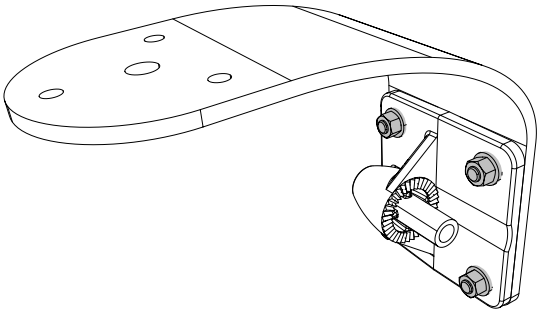

3. Fix the ceiling bracket to the ceiling. The bracket has three 5.5 mm (0.22 in) holes and a central 8.5 mm (0.33 in) hole.

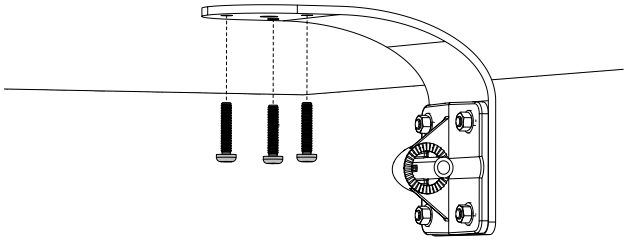

If the three smaller holes will give a safe and secure fixing (for example, by using wood screws into a batten above plasterboard), you could use the central hole for cable routing.

Alternatively, you could start by using a single fixing through the central hole, allowing you to find the correct horizontal coverage by pivoting the speaker on this fixing. When you have found the best position, tighten the central fixing and add fixings to the three smaller holes.

> You must use fixings that are appropriate for the ceiling construction type and the speaker's weight. Ensure that the attachment is safe and secure, as the speakers could be over people's heads.

4. Remove four M5 screws from the back of the cabinet using a 3 mm hex key (H3) and attach the cabinet section of the bracket using these screws.

   If you are going to omit the link section (so that you can only adjust the tilt), fit the bracket with the opening sideways, as shown below.

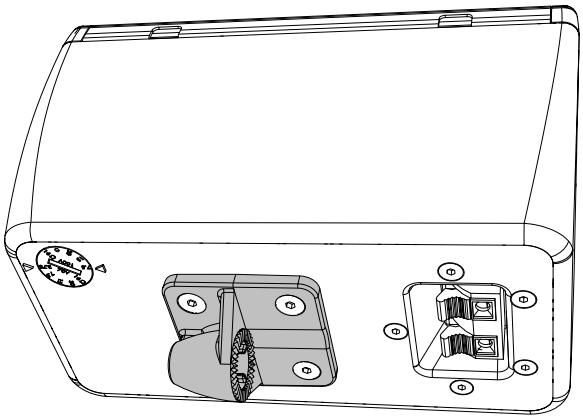

5. If you are going to include the link section, fit the bracket with the opening downwards. Then connect the link section.

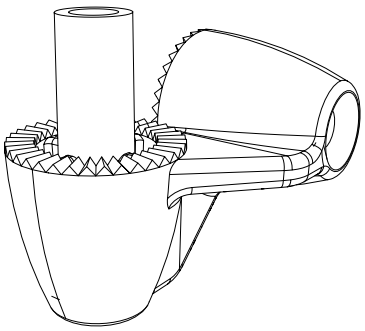

6. Lift the cabinet up to the ceiling bracket.

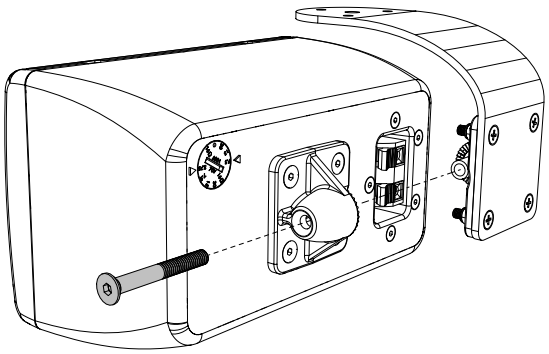

   Attach the two parts of the bracket using the 5 mm securing bolt. Leave the bolt slightly loose so that you can adjust the speaker.

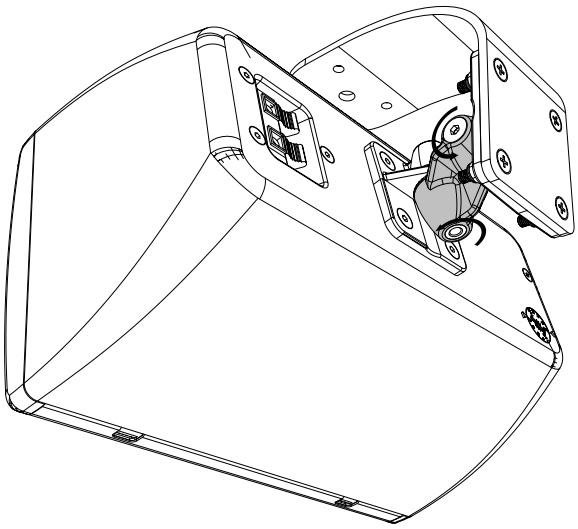

7. Plug in the Phoenix-style connector (page 15).
8. Check the coverage using an audio source and make final adjustments to the vertical and horizontal positions.
9. When you have found the best position, tighten the vertical and horizontal bolts.

To mount the A80T on the ceiling

If you mount these speakers on the ceiling, you can only install in landscape, and this will impact the dispersion. For details, see Portrait or landscape (page 17).

1. Unscrew the cabinet section of the bracket from the ceiling arm using an M6 hex key.

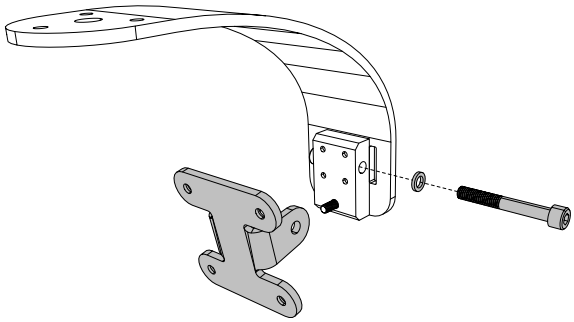

2. Fix the ceiling arm to the ceiling. The ceiling arm has three 6.5 mm (0.26 in) holes and a central 13 mm (0.51 in) hole.

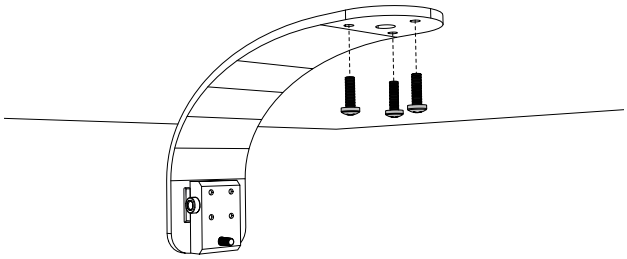

If the three smaller holes will give a safe and secure fixing (for example, by using wood screws into a batten above plasterboard), you could use the central hole for cable routing.

Alternatively, you could start by using a single fixing through the central hole, allowing you to find the correct horizontal coverage by pivoting the speaker on this fixing. When you have found the best position, tighten the central fixing and add fixings to the three smaller holes.

You must use fixings that are appropriate for the ceiling construction type and the speaker's weight. Ensure that the attachment is safe and secure, as the speakers could be over people's heads.

3. Terminate the speaker cable with the Phoenix-style connector (page 15) supplied with the speaker.

   Note that you could stop at this stage (for first fix) and complete the rest of the steps later (for second fix).

4. Remove four M6 screws from the cabinet using a 4 mm hex key (H4) and attach the cabinet bracket section using the same screws.

Don’t use the longer screws supplied with the ceiling bracket. These are for CDD-LIVE only.

There are six M6 screws and you need to remove the four screws in the middle of the cabinet.

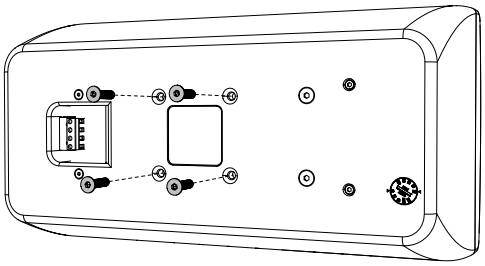

Fit the bracket with the bolt holes horizontal, as shown below.

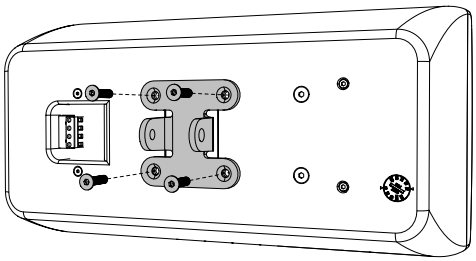

> ⚠ If you attach a safety tether to one of the two remaining holes in the cabinet, the M6 screw must be at least 25 mm (1 in) long.

5. Lift the cabinet up to the ceiling bracket and attach the two parts of the bracket using the 5 mm securing bolt. Leave the bolt a little loose, so you can adjust the vertical speaker position.

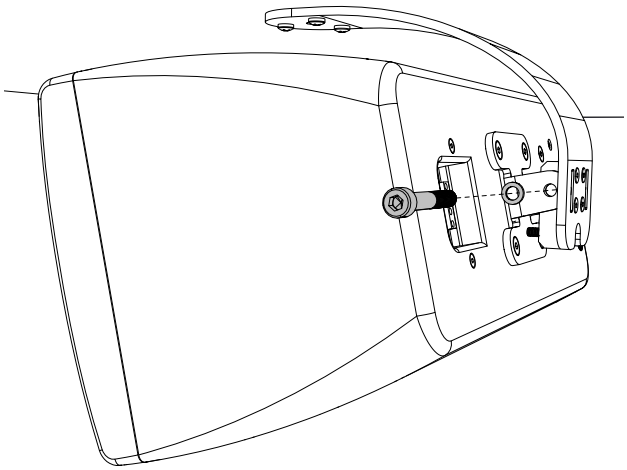

6. Adjust the vertical position using the grub screw accessed from the rear of the bracket.

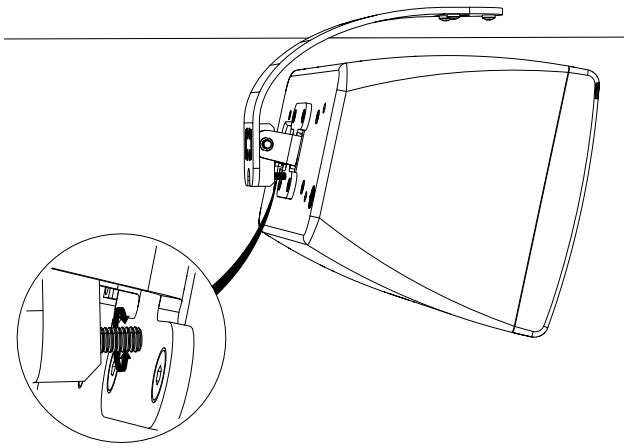

7. Plug in the Phoenix-style connector (page 15).
8. Check the coverage using an audio source and make final adjustments to the vertical and horizontal positions.
9. When you have found the best position, tighten the vertical and horizontal bolts.

Installing ceiling speakers

Cutting ceiling holes

We supply the ADORN ceiling speakers with a cut-out template. This template also acts as the packaging holding the speaker in place in the cardboard box, so take care not to throw this temple away with the packaging.

As an alternative, you can cut a circular hole with the following diameter:

ACS-40TS	197 mm (7.76 in) diameter ceiling hole
ACS-55TS and ACS-55T	222 mm (8.74 in) diameter ceiling hole

The ceiling speaker fixings allow a maximum ceiling thickness of 30 mm (1.18 in).

Suspended ceilings

The ADORN ceiling speakers include two tile rails and a C-bracket for use with suspended or false ceilings.

To prepare a suspended ceiling

1. Remove the ceiling tile and cut a hole in the centre of the tile (see above).

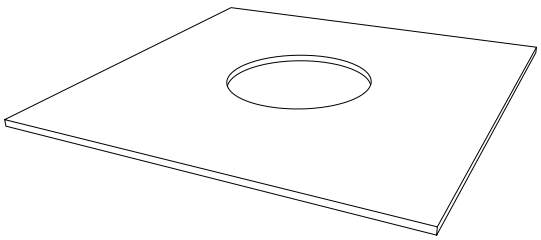

2. Place the tie rails on either side of the hole, orientated as shown and ensuring that the ends align with the edges of the tile.

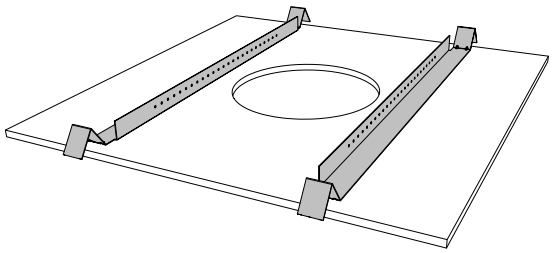

3. Place the C-bracket in position over the hole with the clips hooked over the rails. Make sure you align the bracket accurately with the hole.

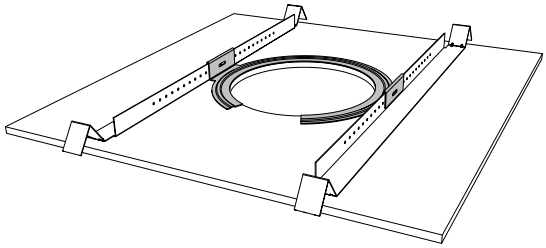

4. Screw the C-bracket in place with the screws provided. Screw from the hole side through to the rails. This will make it easier to access the screws if you need to make an adjustment later.

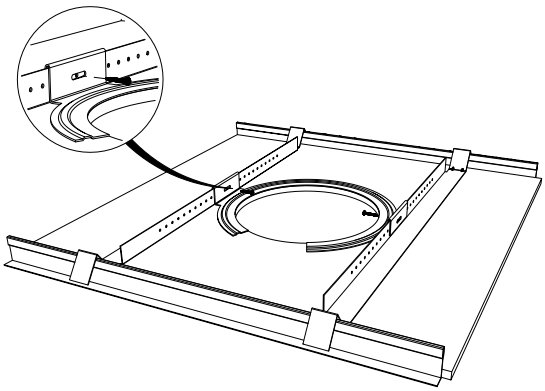

5. Place the bracket assembly into the ceiling. Re-shape the ends of the tile rail so that they fit onto the supporting frame for the ceiling. Note that the tile rails simply hook on top of the ceiling frame; you don't need to fix them in position.
6. Once the tile is back in position, make sure that the rails sit on the ceiling frame and that the C-bracket lines up accurately with the hole.

   If necessary, reach through the hole and loosen the fixing screws holding the C-bracket to the rails, adjust the position and re-tighten the screws.

Installing a ceiling speaker

Once you have prepared a suitable hole in the ceiling, or have prepared a suspended ceiling as described above, you can now install the speaker.

To install a ceiling speaker

1. Pull the cabling down through the hole. It is important that there is enough slack on the cable to allow easy connection of the cables to the speaker.
2. Connect the speaker cable (page 16).
3. Fit a safety wire to the tab and make sure that this is firmly attached to a fixing point independent of the ceiling structure.
4. If necessary, rotate the fixing tabs so that they are parallel to the edge of the bezel, and will be out of the way when you insert the speaker through the ceiling hole. When you tighten the fixing screws, these fixing tabs rotate 90° and tighten to the ceiling to hold the speaker securely in place.

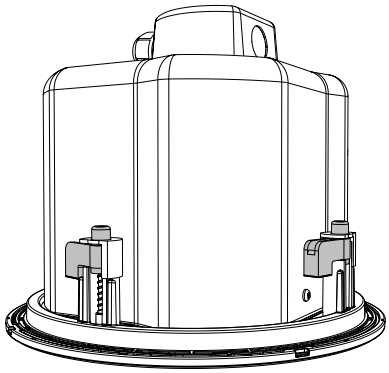

5. If you are fitting a shallow ceiling speaker (ACS-40TS or ACS-55TS), the connector cover is on the side. In this case, you need to hold the speaker at an angle and guide the connector cover and cables into the hole first.

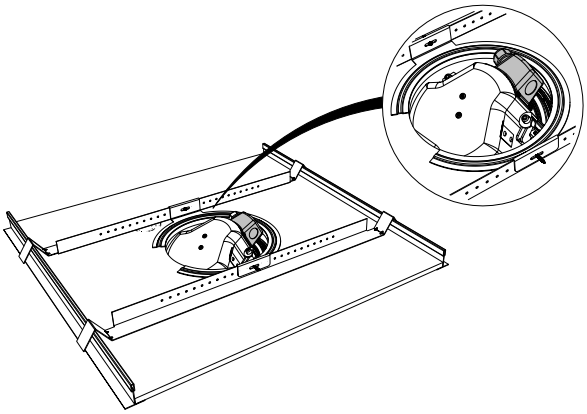

If you are fitting a deep ceiling speaker (ACS-55T), the connector cover is on the back. In this case, you can install the speaker straight upwards.

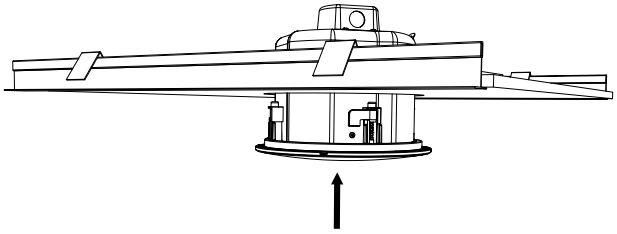

6. If you are installing several ceiling speakers in a line, orient the tweeters so that an imaginary line between the woofer and tweeter points along the line of speakers. This will minimise the phase issues at the crossover point that are inevitable with a two-way speaker.

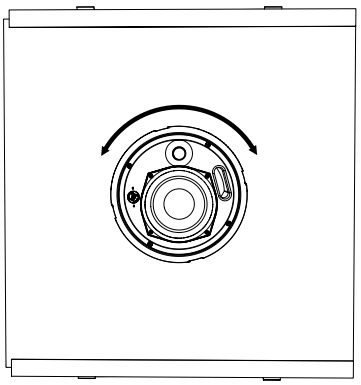

7. Tighten the mounting screws from the front baffle to secure the speaker to the ceiling. The ACS-40TS has three mounting screws, the ACS-55TS and ACS-55T have four. Tighten these screws clockwise so that the swivel tabs rotate 90° and pull down onto the ceiling or ceiling tile to hold the speaker securely in place.

   We recommend a torque setting of 0.5 Nm (and no more than 1 Nm to avoid over tightening). Note

that the fittings allow a maximum ceiling thickness of 30 mm (1.18 in).

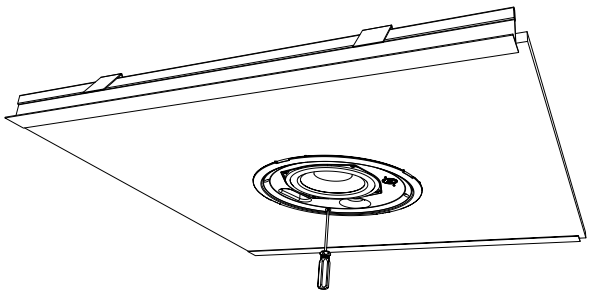

To fit the grille

1. The grille has a simple bayonet fitting. Locate the lugs on the underside of the grille and position them on the ceiling speaker.

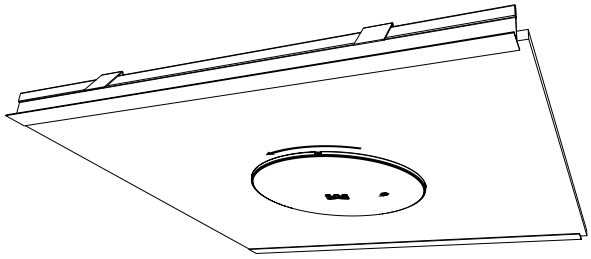

2. Rotate the grille clockwise about 5 degrees to fix it in place.
3. To remove the grille for maintenance or adjustment, rotate the grille anticlockwise about 5 degrees.

Safety information for ceiling speakers

- Martin Audio ADORN ceiling speakers must be installed by experienced installation personnel using all accessories appropriate to the ceiling construction.
- The installer must check with all relevant local, national and international electrical, fire and building safety authorities to ensure compliance with all regulations.
- Each ADORN ceiling speaker must be fitted with a steel safety wire between its rear can safety tag and a suitable overhead supporting structure independent of the ceiling. This is to provide a secondary safety support in the event of damage to the ceiling.
- When installed in an air handling space, the steel cover plates must be sealed to the loudspeaker back cans with firestop putty or a suitable alternative. This is to ensure plenum tight enclosure of the electrical connections.

Compliance with safety standards

- **ACS-40TS** and **ACS-55TS** are certified compliant with **UL 1480A** and **UL 2043**.
- **ACS-55T** is certified compliant with **UL 1480A**, **UL 2043** and **CSA C22.2 No. 205-17**.
- **ACP-55T** is certified compliant with **UL 1480A** and **CSA C22.2 No. 205-17**.

Safety standards

- **UL 1480A** – *Standard for safety for speakers for commercial and professional use*.
- **UL 2043** – *Standard for safety for fire test for heat and visible smoke release for discrete products and their accessories installed in air-handling spaces*.
- **CSA C22.2 No. 205-17** – *Canadian standard for signal equipment*.

Fitting pendant speakers

The ACP-55T is designed to be suspended in free space from a single point. Use the mounting tab on the top of the enclosure to attach the CK3 accessory (page 12) or your own wire rope or chain.

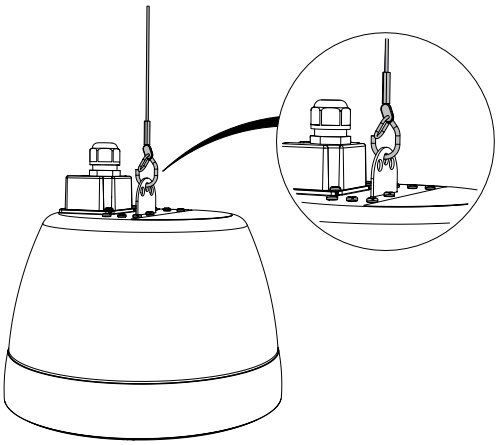

The grille fits in exactly the same way as for the ceiling speakers. For details, see To fit the grille (page 29).

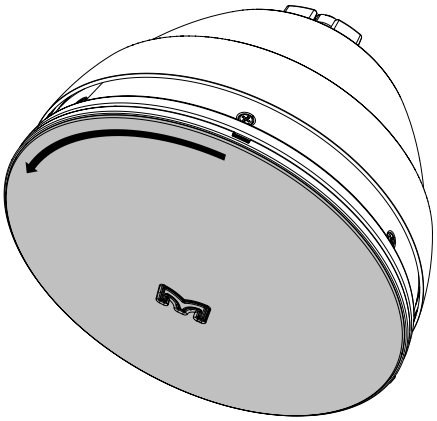

The suspension method and fixings must be rated for flown applications and have a working load limit greater than the weight of the speaker.

Fitting the pendant speaker grille

If you know the required electrical configuration (low impedance or the specific 70/100 V line tap), you can select the power (page 14) and fit the grille before you suspend the ACP-55T.

Amplifiers

For low impedance ADORN systems, we recommend Martin Audio VIA amplifiers. For a larger ADORN system, you could use an iKON amplifier. For details of compatibility, see ADORN amplifier compatibility (page 34).

For 70/100 V line ADORN systems, see Amplifiers for 70/100 V systems (page 33).

VIA amplifiers

We have four VIA amplifiers, two with two channels and two with four channels.

Amplifier	Power output
VIA2004	4 x 500 W into 4 ohm
	4 x 250 W into 8 ohm
VIA2502	2 x 1,250 W into 2 ohm
	2 x 800 W into 4 ohm
	2 x 450 W into 8 ohm
	1 x 2,500 W bridged into 4 ohm
	1 x 1,600 W bridged into 8 ohm
VIA5002	2 x 2,500 W into 4 ohm
	2 x 1,600 W into 8 ohm
VIA5004	4 x 1,250 W into 2 ohm
	4 x 800 W into 4 ohm
	4 x 450 W into 8 ohm
	2 x 2,500 W bridged into 4 ohm
	2 x 1,600 W bridged into 8 ohm

For further details, visit martin-audio.com.

iKON amplifiers

We have three iKON amplifiers, two with four channels and one with eight channels.

The iKON amplifiers have on-board system processing, so you don't need a separate system controller.

Amplifier	Power output
iK41	4 x 1,500 W into 2 ohm
	4 x 1,500 W into 4 ohm
	4 x 750 W into 8 ohm
	4 x 325 W into 16 ohm
	2 x 3,000 W bridged into 4 ohm
	2 x 3,000 W bridged into 8 ohm
iK42	4 x 5,000 W into 2 ohm
	4 x 3,000 W into 4 ohm
	4 x 1,500 W into 8 ohm
	4 x 750 W into 16 ohm
	2 x 10,000 W bridged into 4 ohm
	2 x 6,000 W bridged into 8 ohm
iK81	8 x 1,250 W into 2 ohm
	8 x 1,250 W into 4 ohm
	8 x 1,250 W into 8 ohm
	8 x 625 W into 16 ohm
	4 x 2,500 W bridged into 4 ohm
	4 x 2,500 W bridged into 8 ohm

For further details, visit martin-audio.com.

Amplifiers for 70/100 V systems

For a 70/100 V line system, use one of the following amplifiers:

- Martin Audio VIA5002. This is the only VIA amplifier that supports 70/100 V line systems.
- Martin Audio iKON amplifiers (iK41, iK42 and iK81). Note that the iKON amplifiers have on-board system processing, so you don't need a separate system controller with these amplifiers.

Amplifier	Power output
VIA5002	2 x 2,500 W, 70 V line
	2 x 2,500 W, 100 V line
iK41	4 x 1,500 W, 70 V line
	4 x 1,163 W, 100 V line
iK42	4 x 3,500 W, 70 V line
	4 x 5,000 W, 100 V line
iK81	8 x 1,250 W, 70 V line
	8 x 1,250 W, 100 V line

For further details, visit martin-audio.com.

ADORN amplifier compatibility

The table below shows amplifier compatibility for all ADORN speakers (except A80T) in low impedance mode:

Amplifier	Channels	Channels used	One speaker per channel (16 ohm)	Two, three or four speakers per channel (4 ohm for four)	Five, six, seven or eight speakers per channel (2 ohm for eight)
iK41	One channel	1 of 4	Yes	Yes	Yes
	Two channels bridged	2 of 4	NN	NN	NN
iK42	One channel	1 of 4	Yes	Yes	Yes
	Two channels bridged	2 of 4	NN	NN	NN
iK81	One channel	1 of 8	Yes	Yes	Yes
	Two channels bridged	2 of 8	NN	NN	NN
VIA5004	One channel	1 of 4	Yes	Yes	Yes
	Two channels bridged	2 of 4	NN	NN	NN
VIA2502	One channel	1 of 2	Yes	Yes	Yes
	Two channels bridged	2 of 2	NN	NN	NN
VIA5002	One channel	1 of 2	Yes	Yes	No
	Bridging not available	NA	NA	NA	NA
VIA2004	One channel	1 of 4	Yes	Yes	No
	Bridging not available	NA	NA	NA	NA

For explanation, see Amplifier compatibility legend (page 35).

A80T amplifier compatibility

The table below shows amplifier compatibility for A80T in low impedance mode:

Amplifier	Channels	Channels used	One A80T per channel (8 ohm)	Two A80T per channel (4 ohm)	Three A80T per channel (2.67 ohm)	Four A80T per channel (2 ohm)
iK41	One channel	1 of 4	Yes	Yes	Yes	–0.3 dB
	Two channels bridged	2 of 4	NN	NN	NN	No
iK42	One channel	1 of 4	Yes	Yes	Yes	Yes
	Two channels bridged	2 of 4	NN	NN	NN	NN
iK81	One channel	1 of 8	Yes	Yes	Yes	–1.1 dB
	Two channels bridged	2 of 8	NN	NN	NN	No
VIA5004	One channel	1 of 4	Yes	Yes	–0.6 dB	–1.1 dB
	Two channels bridged	2 of 4	NN	NN	No	No
VIA2502	One channel	1 of 2	Yes	Yes	–0.6 dB	–1.1 dB
	Two channels bridged	2 of 2	NN	NN	No	No
VIA5002	One channel	1 of 2	Yes	Yes	No	No
	Bridging not available	NA	NA	NA	NA	NA
VIA2004	One channel	1 of 4	–2.0 dB	–2.0 dB	No	No
	Bridging not available	NA	NA	NA	NA	NA

For explanation, see Amplifier compatibility legend (page 35).

Amplifier compatibility legend

Yes	The amplifier channel can deliver the required power to achieve the full pink noise rated output of the loudspeaker, providing a reasonable amount of headroom for dynamic music content.
-1.0 dB	The amplifier channel provides sufficient power to meet the loudspeaker's RMS requirements (based on a 20 Hz – 20 kHz sine wave). However, it is unable to deliver the 6 dB peaks found in the AES pink noise test signal, which more accurately reflects the demands of dynamic music content. The table shows the shortfall in dynamic headroom, expressed in decibels.
No	The amplifier channel does not meet the loudspeaker's pink noise or RMS power requirements and is therefore not recommended. However, it may still be suitable if the application does not demand the full rated output of the loudspeaker.
NN	**Not needed**: channel bridging is unnecessary, as a single amplifier channel provides sufficient power to drive the speaker.
NA	**Not available**: channel bridging isn't available with this amplifier.

Note that it is far more likely that an underpowered amplifier will damage a loudspeaker than one with excess power. Modern limiters in speaker presets can safely manage the amplifier's output. However, driving a system into distortion due to an insufficiently powered amplifier can cause heat buildup and lead to voice coil burnout, which is the most common form of loudspeaker damage.

If you need assistance with system design, please contact Technical Support (page 60).

System controllers

For system controllers, we recommend the Martin Audio DX0.4, DX0.6 or DX4.0. Note that if you use an iKON amplifier, you don't need a system controller as these amplifiers have on-board system processing. For further details, see our website martin-audio.com.

DX0.4 and DX0.6 presets

If you have a DX0.4 or DX0.6 system controller, load the ADORN presets using the **DX0.4 and DX0.6 Control Software**.

To load DX0.4 and DX0.6 presets

1. Start the **DX0.4 and DX0.6 Control Software** by selecting **Start** ⊞ and typing **DX Series** or by double-clicking the desktop shortcut.
2. Double-click the middle of a processor icon (shown below). This will load the processor window.

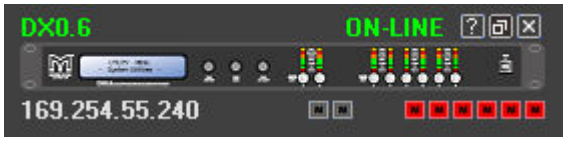

3. At the bottom of the processor window, click an output channel tab such as **OUT 1**.
4. In the **Channel Preset** section (highlighted in red in the screenshot below), click **LOAD**. Don't click the other **LOAD** button at top left of the processor window, as this is for loading all channels and settings for the processor.

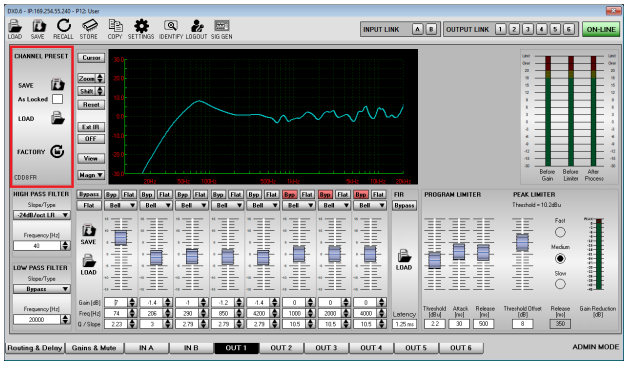

5. Navigate to the folder you specified when you unzipped the control software. The presets are stored in the folder `Output Channel Presets` with one subfolder for each speaker range.

   The following presets are available for ADORN speakers:

   - A40 Full range – Use this for A40 or A40T without a subwoofer.
   - A40 with Sub – Use this for A40 or A40T with a subwoofer.
   - A55 Full range – Use this for A55 or A55T without a subwoofer.
   - A55 with Sub – Use this for A55 or A55T with a subwoofer.
   - A80T Full range – Use this for A80T without a subwoofer.
   - A80T with Sub – Use this for A80T with a subwoofer.
   - ACP-55T – Use this for the ACP-55T pendant.
   - ACS-40 – Use this for the ACS-40TS.
   - ACS-55T – Use this for the ACS-55T.
   - ACS-55TS – Use this for the ACS-55TS.

For further details of the **DX0.4 and DX0.6 Control Software**, go to our website martin-audio.com, select **Support > Software/Firmware**, scroll to **DX0.4 and DX0.6 Control Software** and click **USER GUIDE**.

Using other controllers

If you use a controller from another manufacturer, you need to configure settings such as crossovers, limiters and equalisation points. You can find these settings in our **Loudspeaker parameter spreadsheet**, which we provide as a free download. For details of how to use the spreadsheet, read the instructions in the spreadsheet or watch the video guide.

To download the loudspeaker parameter spreadsheet

1. Go to our website martin-audio.com.
2. Select **Support > Loudspeaker Settings**.
3. Scroll to **CURRENT-PRODUCT-PARAMETERS** and click **DOWNLOAD**.

To watch the video guide

1. Go to our website martin-audio.com.
2. Select **Support > Loudspeaker Settings**.

3. Scroll to **PARAMETER VIDEO** and click **VIDEO**.

System design

To design your system and decide on the best positions for speakers and subs, we recommend Martin Audio **Display 3** software, which we provide as a free download from our website.

Display 3 allows you to model your space and experiment with various system configurations and speaker positions. Display 3 predicts the performance of your experimental configurations, allowing you to optimise the performance of your system at the design stage.

To download Display 3

1. Visit our website martin-audio.com.
2. Select **Support > Software/Firmware**.
3. Scroll to **Display 3** and click **Download**.

EASE and EASE Focus files

You can model ADORN in EASE, EASE Focus or other modelling software by downloading ZIP files of high-resolution GLL and CLF files. These files are available as free downloads from our website.

A full set of GLL files is available for use with EASE only. Separate GLL files for the A40 and A55 models are compatible with EASE Focus. CLF files are available for all models except the A80T.

Note that we recommend using **Display 3** rather than EASE or EASE Focus.

To download GLL and CLF files

1. Visit our website martin-audio.com.
2. Select **Support > GLL and CLF Data**.

3D SketchUp files

You can model ADORN in **SketchUp** by downloading the 3D SketchUp files, available as free downloads from our website.

To download 3D SketchUp files

1. Visit our website martin-audio.com.
2. Select **Products > Product List** and click on the appropriate speaker.
3. Select the **Technical drawings & 3D models** section and click **SKP-BLACK** or **SKP-WHITE**.
4. To download SketchUp files for accessories, select the **Accessories** section and click **SKP-B** or **SKP-W**.

Revit families for ADORN

For modelling ADORN speakers in Revit, we provide three Revit families as free downloads:

- ADORN A series Revit family – for on-wall speakers A40, A40T, A55, A55T and A80T.
- ADORN ACS series Revit family – for ceiling speakers ACS-40TS, ACS-55TS and ACS-55T.
- ADORN ACP series Revit family – for pendant speaker ACP-55T.

To download the ADORN on-wall speaker Revit family

1. Visit our website martin-audio.com.
2. Select **Products > Product List** and select any of the ADORN on-wall speakers.
3. Select the **Technical drawings & 3D models** section and click **REVIT FILE**.

To download the ADORN ceiling speaker Revit family

1. Visit our website martin-audio.com.
2. Select **Products > Product List** and select any of the ADORN ceiling speakers.
3. Select the **Technical drawings & 3D models** section and click **REVIT FILE**.

To download the ADORN pendant speaker Revit family

1. Visit our website martin-audio.com.
2. Select **Products > Product List** and select the ADORN pendant speaker ACP-55T.
3. Select the **Technical drawings & 3D models** section and click **REVIT FILE**.

DWG files

You can view the ADORN technical drawings in CAD software such as AutoCAD by downloading the DWG files. These files are available as free downloads from our website.

To download DWG files

1. Visit our website martin-audio.com.
2. Select **Products > Product List** and click on the appropriate speaker.
3. Select the **Technical drawings & 3D models** section and click **DWG**.
4. For DWG files for accessories, select the **Accessories** section and click **DWG**.

Painting speakers

If you want to change the colour of your ADORN on-wall loudspeakers, we recommend that you paint the ABS enclosure using acrylic paint. Before you do this, remove the grille (see below).

If you want to change the colour of the grille, you should, strictly speaking, strip off the powder coating back to bare metal before you repaint. However, you can get a great finish using standard automobile nitrocellulose spray paint over the top of the powder coat. Before painting, remove the fabric grille cloth attached to the inside of the grille. After painting, reattach this fabric using a general-purpose spray adhesive such as 3M Super 77.

Grille removal

The ADORN loudspeakers have a sprung grille that clips into slots on the sides of the cabinet, making it quick and easy to remove. The procedure for the A80T is different from the procedure for the other ADORN loudspeakers, as described below.

To remove the A40, A40T, A55 or A55T grille

1. Place the speaker on its back on a suitable surface.
2. Press down on the centre of the grille with the palm of your hand.
3. Prize one side of the grille out of the slot using your fingers. You may need to use your fingernails.
4. Slide the grille out of the slot on the other side.
5. The grille may now be slightly too flat. Before refitting, gently bend the grille the opposite way so it has a slight curve. This ensures the grille is held tightly in place by the slots on the sides of the loudspeaker.

To remove the A80T grille

1. Place the speaker on a suitable surface.
2. Remove the two screws that hold the grille in place.

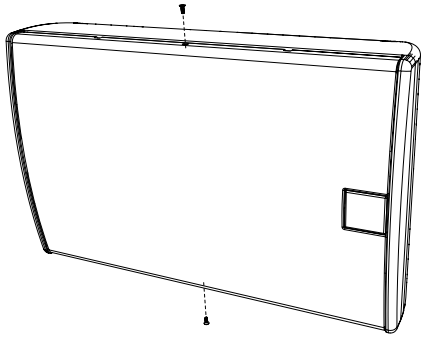

3. Insert an appropriately sized flat-bladed screwdriver into one of the two gaps at the side of the grille.

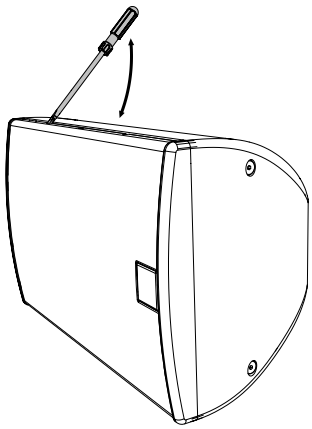

4. Gently push the handle down slightly to ease the grille out of the slot.
5. Lift the handle slightly to ease the grille forward so that it doesn't clip straight back into the slot.

6. Repeat this process with the second gap and ease the grille out of the slot all the way up one side of the cabinet. The grille should now pop out of the slot.

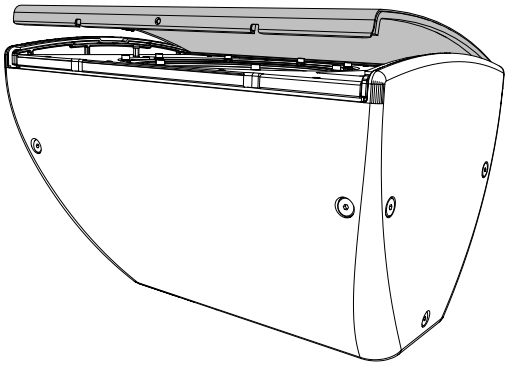

Grille refitting

This is the reverse of the grille removal process.

To refit the grille

1. For A40, A40T, A55 or A55T, you may need to slightly bend the grille so that it is curved rather than flat.
2. Insert one side of the grille into the slot on one side of the cabinet. Make sure the grille is completely engaged in the slot.
3. Push the front of the grille with the flat of your hand so that the other edge of the grille clips into place.
4. Make sure that the grille is engaged in the slot by pushing the edge of the grille back starting at the top or bottom. You may need to do this a little at a time, working down the length of the grille until it pops into place.
5. For A80T, replace the two screws that hold the grille in place.

Specifications

On-wall speakers A40 and A40T

Type	Ultra-compact passive two-way system, front ported bass reflex
Frequency response[1]	98 Hz – 17 kHz ± 3 dB, –10 dB @ 70 Hz
Drivers	LF: 4” (100 mm) with 1” (25 mm) high-temp voice coil, coated paper cone, rubber surround, ferrite motor, pressed steel chassis HF: 0.75” (19 mm) silk dome, neodymium motor
Rated power[2]	40 W AES, 160 W peak
Recommended amplifier	VIA2004 (for A40), VIA5002 (for A40T)
Sensitivity[3]	87 dB
Maximum SPL[2,3]	103 dB continuous, 109 dB peak, 115 dB peak with crest factor 4
Nominal impedance	16 ohm
Dispersion[4]	110° H x 80° V
Crossover	3.5 kHz passive (LF and HF auto-resetting fuses)
Transformer taps (A40T only)	70 V: 20 W, 10 W, 5 W, 2.5 W or 16 ohm 100 V: 20 W, 10 W, 5 W or 16 ohm
Recommended high pass filter	60 Hz 24 dB/oct
Enclosure	ABS, UL 94 V-0 rated
Finish	Black (RAL 9005) or white (RAL 9016)
Grille	Perforated steel
Connectors	Phoenix-style 12 A plug with screw terminals; for replacements see ADORN spare parts (page 59) Previous models used spring-loaded push terminals
Dimensions (excluding bracket)	(W) 124 mm x (H) 200 mm x (D) 114 mm (W) 4.9 in x (H) 7.9 in x (D) 4.5 in
Weight	A40: 1.75 kg (3.9 lbs) A40T: 2.13 kg (4.7 lbs)
Pricing and packaging	Priced individually but sold and packaged in pairs
IP rating	IP54 compliant when used with optional connector cover (see accessories below)
Accessories (supplied)	Weatherised wall bracket supplied with speaker (replacement part ASM10002 for black or ASM10001 for white)
Accessories (optional)	Weatherised connector cover AIPKIT (page 11) Weatherised ceiling bracket CDDCB5 (page 12)

[1]On-axis in half space (2 pi) at 1 m.

[2]Tested for 2 hours with band-limited pink noise as specified in AES2-1984 (r2003). Peak power defined as 6 dB above AES power.

[3]In half space (2 pi) at 1 m with 1 watt input and band-limited pink noise.

[4]In open space (4 pi) at 2 m to –6 dB.

On-wall speakers A55 and A55T

Type	Ultra-compact passive two-way system, front ported bass reflex
Frequency response[1]	90 Hz – 17 kHz ± 3 dB, –10 dB @ 65 Hz
Drivers	LF: 5.25” (135 mm) with 1” (25 mm) high-temp voice coil, coated paper cone, rubber surround, ferrite motor, pressed steel chassis HF: 0.75” (19 mm) silk dome, neodymium motor
Rated power[2]	50 W AES, 200 W peak
Recommended amplifier	VIA2004 (for A55), VIA5002 (for A55T)
Sensitivity[3]	90 dB
Maximum SPL[2,3]	107 dB continuous, 113 dB peak, 119 dB peak with crest factor 4
Nominal impedance	16 ohm
Dispersion[4]	110° H x 80° V
Crossover	3.5 kHz passive (LF and HF auto-resetting fuses)
Transformer taps (A55T only)	70 V: 30 W, 15 W, 7.5 W, 3.75 W or 16 ohm 100 V: 30 W, 15 W, 7.5 W or 16 ohm
Recommended high pass filter	60 Hz 24 dB/oct
Enclosure	ABS, UL 94 V-0 rated
Finish	Black (RAL 9005) or white (RAL 9016)
Grille	Perforated steel
Connectors	Phoenix-style 12 A plug with screw terminals; for replacements see ADORN spare parts (page 59) Previous models used spring-loaded push terminals
Dimensions (excluding bracket)	(W) 152 mm x (H) 245 mm x (D) 140 mm (W) 6.0 in x (H) 9.6 in x (D) 5.5 in
Weight	A55: 2.21 kg (4.9 lbs) A55T: 2.81 kg (6.2 lbs)
Pricing and packaging	Priced individually but sold and packaged in pairs
IP rating	IP54 compliant when used with optional connector cover (see accessories below)
Accessories (supplied)	Weatherised wall bracket supplied with speaker (replacement part ASM10002 for black or ASM10001 for white)
Accessories (optional)	Weatherised connector cover AIPKIT (page 11) Weatherised ceiling bracket CDDCB5 (page 12)

[1]On-axis in half space (2 pi) at 1 m.

[2]Tested for 2 hours with band-limited pink noise as specified in AES2-1984 (r2003). Peak power defined as 6 dB above AES power.

[3]In half space (2 pi) at 1 m with 1 watt input and band-limited pink noise.

[4]In open space (4 pi) at 2 m to –6 dB.

On-wall speaker A80T

Type	Compact passive two-way system, front ported bass reflex
Frequency response[1]	63 Hz – 17 kHz ± 3 dB, –10 dB @ 50 Hz
Drivers	LF: 8” (203 mm) with 2” (50 mm) high-temp voice coil, ferrite motor system HF: 1” (25 mm) with 1" (25 mm) exit polymer dome compression driver
Rated power[2]	200 W AES, 800 W peak
Recommended amplifier	VIA2502 or VIA5004 (for low impedance), or VIA5002 (for 70/100 V line)
Sensitivity[3]	91 dB
Maximum SPL[2,3]	114 dB continuous, 120 dB peak, 126 dB peak with crest factor 4
Nominal impedance	8 ohm
Dispersion[4]	90° H x 50° V
Crossover	2.3 kHz passive (LF and HF auto-resetting fuses)
Transformer taps	70 V: 60 W, 30 W, 15 W, 7.5 W or 8 ohm 100 V: 60 W, 30 W, 15 W or 8 ohm
Recommended high pass filter	40 Hz 24 dB/oct (8 ohm), 60 Hz 24 dB/oct (transformer)
Enclosure	ABS, UL 94 V-0 rated
Finish	Black (RAL 9005) or white (RAL 9016)
Grille	Perforated steel
Connectors	Phoenix-style 12 A plug with screw terminals; for replacements see ADORN spare parts (page 59)
Fittings	6 x M6 inserts for wall or ceiling brackets
Dimensions (excluding bracket)	(W) 246 mm x (H) 421 mm x (D) 233 mm (W) 9.7 in x (H) 16.6 in x (D) 9.2 in
Weight	9.1 kg (20.0 lbs)
Pricing and packaging	Priced, sold and packaged individually
IP rating	IP54 compliant when used with optional connector cover (see accessories below)
Accessories (supplied)	Weatherised wall bracket supplied with speaker (replacement part WB6/8B for black or WB6/8W for white)
Accessories (optional)	Weatherised connector cover kit ASF09007 (page 11) Weatherised ceiling bracket CDDCB6/8 (page 12)

[1]On-axis in half space (2 pi) at 1 m.

[2]Tested for 2 hours with band-limited pink noise as specified in AES2-1984 (r2003). Peak power defined as 6 dB above AES power.

[3]In half space (2 pi) at 1 m with 1 watt input and band-limited pink noise.

[4]In open space (4 pi) at 2 m to –6 dB.

Ceiling speaker ACS-40TS

Type	Ultra-compact, passive two-way ceiling speaker, ported bass reflex, shallow back can
Frequency response[1]	106 Hz – 20 kHz ± 3 dB, –10 dB @ 73 Hz
Drivers	LF: 4” (100 mm) with 1” (25 mm) high-temp voice coil, coated paper cone, rubber surround, ferrite motor, pressed steel chassis HF: 0.75” (19 mm) silk dome, neodymium motor
Rated power[2]	40 W AES, 160 W peak
Recommended amplifier	VIA2004 (for low impedance), VIA5002 (for 70/100 V line)
Sensitivity[3]	86 dB
Maximum SPL[2,3]	102 dB continuous, 108 dB peak, 114 dB peak with crest factor 4
Nominal impedance	16 ohm
Dispersion[4]	180° conical up to 10 kHz
Crossover	3.5 kHz passive (LF and HF auto-resetting fuses)
Transformer taps	70 V: 20 W, 10 W, 5 W, 2.5 W or 16 ohm 100 V: 20 W, 10 W, 5 W or 16 ohm
Recommended high pass filter	75 Hz 24 dB/oct
Enclosure	UL 94 V-0-rated ABS baffle with steel back can
Finish	Baffle and grille: white (RAL 9016) Back can: zinc plated
Grille	Perforated steel, powder coated, bayonet fitting; for replacements see ADORN spare parts (page 59)
Connectors	Ceramic connector (in and link) behind fire-retardant steel cover
Dimensions	Diameter: 221 mm (8.7 in) Back can depth: 97 mm (3.8 in) or 115 mm (4.5 in) with grille
Maximum ceiling thickness	30 mm (1.18 in)
Hole cut-out dimension	197 mm (7.75 in) diameter
Weight	2.2 kg (4.8 lbs)
Ceiling safety standards	Certified compliant: UL 1480A, UL 2043
Pricing and packaging	Priced individually but sold and packaged in pairs
Accessories (supplied)	Two tile rails and C-ring backing plate supplied with speaker Cut-out template (supplied as part of packaging)

[1]On-axis in half space (2 pi) at 1 m.

[2]Tested for 2 hours with band-limited pink noise as specified in AES2-1984 (r2003). Peak power defined as 6 dB above AES power.

[3]In half space (2 pi) at 1 m with 1 watt input and band-limited pink noise.

[4]In open space (4 pi) at 2 m to –6 dB.

Ceiling speaker ACS-55T

Type	Compact, passive two-way ceiling speaker, ported bass reflex, deep back can
Frequency response[1]	98 Hz – 20 kHz ± 3 dB, –10 dB @ 62 Hz
Drivers	LF: 5.25” (135 mm) with 1” (25 mm) high-temp voice coil, coated paper cone, rubber surround, ferrite motor, pressed steel chassis HF: 0.75” (19 mm) silk dome, neodymium motor
Rated power[2]	50 W AES, 200 W peak
Recommended amplifier	VIA2004 (for low impedance), VIA5002 (for 70/100 V line)
Sensitivity[3]	90 dB
Maximum SPL[2,3]	107 dB continuous, 113 dB peak, 119 dB peak with crest factor 4
Nominal impedance	16 ohm
Dispersion[4]	150° conical up to 7 kHz
Crossover	3 kHz passive (LF and HF auto-resetting fuses)
Transformer taps	70 V: 30 W, 15 W, 7.5 W, 3.75 W or 16 ohm 100 V: 30 W, 15 W, 7.5 W or 16 ohm
Recommended high pass filter	65 Hz 24 dB/oct
Enclosure	UL 94 V-0-rated ABS baffle with steel back can
Finish	Baffle and grille: white (RAL 9016) Back can: zinc plated
Grille	Perforated steel, powder coated, bayonet fitting; for replacements see ADORN spare parts (page 59)
Connectors	Ceramic connector (in and link) behind fire-retardant steel cover
Dimensions	Diameter: 245 mm (9.7 in) Back can depth: 192 mm (7.55 in) or 209 mm (8.23 in) with grille
Maximum ceiling thickness	30 mm (1.18 in)
Hole cut-out dimension	222 mm (8.74 in) diameter
Weight	3 kg (6.6 lbs)
Ceiling safety standards	Certified compliant: UL 1480A, UL 2043, CSA C22.2 No. 205-17
Pricing and packaging	Priced individually but sold and packaged in pairs
Accessories (supplied)	Two tile rails and C-ring backing plate supplied with speaker Cut-out template (supplied as part of packaging)

[1]On-axis in half space (2 pi) at 1 m.

[2]Tested for 2 hours with band-limited pink noise as specified in AES2-1984 (r2003). Peak power defined as 6 dB above AES power.

[3]In half space (2 pi) at 1 m with 1 watt input and band-limited pink noise.

[4]In open space (4 pi) at 2 m to –6 dB.

Ceiling speaker ACS-55TS

Type	Compact, passive two-way ceiling speaker, ported bass reflex, shallow back can
Frequency response[1]	117 Hz – 20 kHz ± 3 dB, –10 dB @ 79 Hz
Drivers	LF: 5.25” (135 mm) with 1” (25 mm) high-temp voice coil, coated paper cone, rubber surround, ferrite motor, pressed steel chassis HF: 0.75” (19 mm) silk dome, neodymium motor
Rated power[2]	50 W AES, 200 W peak
Recommended amplifier	VIA2004 (for low impedance), VIA5002 (for 70/100 V line)
Sensitivity[3]	90 dB
Maximum SPL[2,3]	107 dB continuous, 113 dB peak, 119 dB peak with crest factor 4
Nominal impedance	16 ohm
Dispersion[4]	150° conical up to 7 kHz
Crossover	3 kHz passive (LF and HF auto-resetting fuses)
Transformer taps	70 V: 30 W, 15 W, 7.5 W, 3.75 W or 16 ohm 100 V: 30 W, 15 W, 7.5 W or 16 ohm
Recommended high pass filter	65 Hz 24 dB/oct
Enclosure	UL 94 V-0-rated ABS baffle with steel back can
Finish	Baffle and grille: white (RAL 9016) Back can: zinc plated
Grille	Perforated steel, powder coated, bayonet fitting; for replacements see ADORN spare parts (page 59)
Connectors	Ceramic connector (in and link) behind fire-retardant steel cover
Dimensions	Diameter: 245 mm (9.7 in) Back can depth: 100 mm (3.95 in) or 118 mm (4.65 in) with grille
Maximum ceiling thickness	30 mm (1.18 in)
Hole cut-out dimension	222 mm (8.74 in) diameter
Weight	2.8 kg (6.2 lbs)
Ceiling safety standards	Certified compliant: UL 1480A, UL 2043
Pricing and packaging	Priced individually but sold and packaged in pairs
Accessories (supplied)	Two tile rails and C-ring backing plate supplied with speaker Cut-out template (supplied as part of packaging)

[1]On-axis in half space (2 pi) at 1 m.

[2]Tested for 2 hours with band-limited pink noise as specified in AES2-1984 (r2003). Peak power defined as 6 dB above AES power.

[3]In half space (2 pi) at 1 m with 1 watt input and band-limited pink noise.

[4]In open space (4 pi) at 2 m to –6 dB.

Pendant speaker ACP-55T

Type	Passive two-way pendant speaker, ported bass reflex
Frequency response[1]	98 Hz – 20 kHz ± 3 dB, –10 dB @ 56 Hz
Drivers	LF: 5.25” (135 mm) with 1” (25 mm) high-temp voice coil, coated paper cone, rubber surround, ferrite motor, pressed steel chassis HF: 0.75” (19 mm) silk dome, neodymium motor
Rated power[2]	50 W AES, 200 W peak
Recommended amplifier	VIA2004 (for low impedance), VIA5002 (for 70/100 V line)
Sensitivity[3]	86 dB
Maximum SPL[2,3]	103 dB continuous, 109 dB peak, 115 dB peak with crest factor 4
Nominal impedance	16 ohm
Dispersion[4]	150° conical up to 7 kHz
Crossover	3 kHz passive (LF and HF auto-resetting fuses)
Transformer taps	70 V: 30 W, 15 W, 7.5 W, 3.75 W or 16 ohm 100 V: 30 W, 15 W, 7.5 W or 16 ohm
Recommended high pass filter	65 Hz 24 dB/oct
Enclosure	UL 94 V-0-rated ABS baffle with steel back can
Finish	Black (RAL 9005) or white (RAL 9016)
Grille	Perforated steel, powder coated, bayonet fitting; for replacements see ADORN spare parts (page 59)
Connectors	Ceramic connector (in and link)
Dimensions	Diameter: 246 mm (9.7 in) Depth: 238 mm (9.35 in)
Weight	3.46 kg (7.62 lbs)
Ceiling safety standards	Certified compliant: UL 1480A, CSA C22.2 No. 205-17
Pricing and packaging	Priced, sold and packaged individually
Accessories (optional)	3 metre (10 ft) suspension cable accessory kit (part CK3) (page 12)

[1]On-axis in open space (4 pi) with full-range preset.

[2]Tested for 2 hours with band-limited pink noise as specified in AES2-1984 (r2003). Peak power defined as 6 dB above AES power.

[3]In open space (4pi) at 1 m with 1 watt input.

[4]In open space (4 pi) at 2 m to –6 dB.

Technical drawings

To use these technical drawings in CAD software, see DWG files (page 39).

On-wall speaker A40

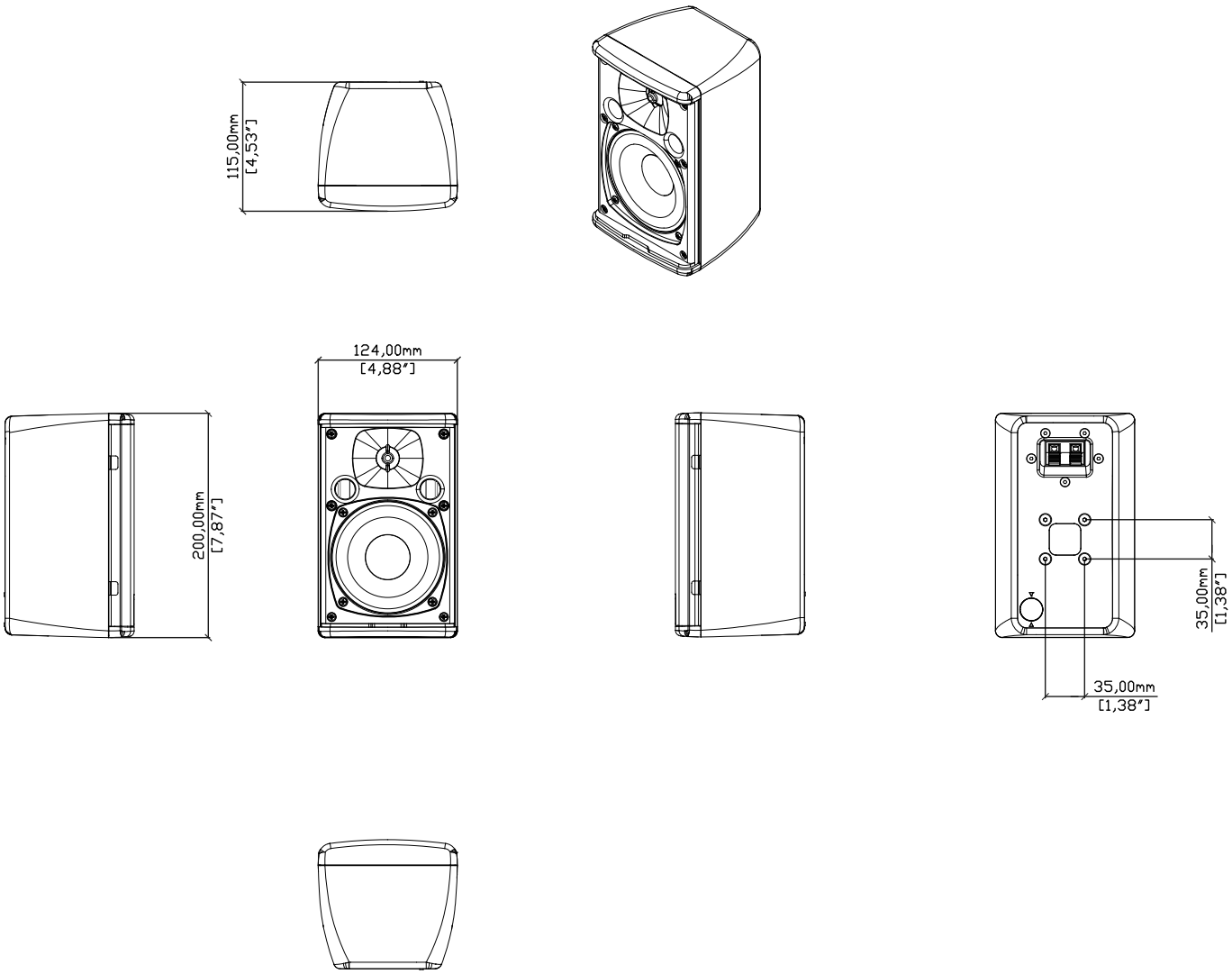

On-wall speaker A40T

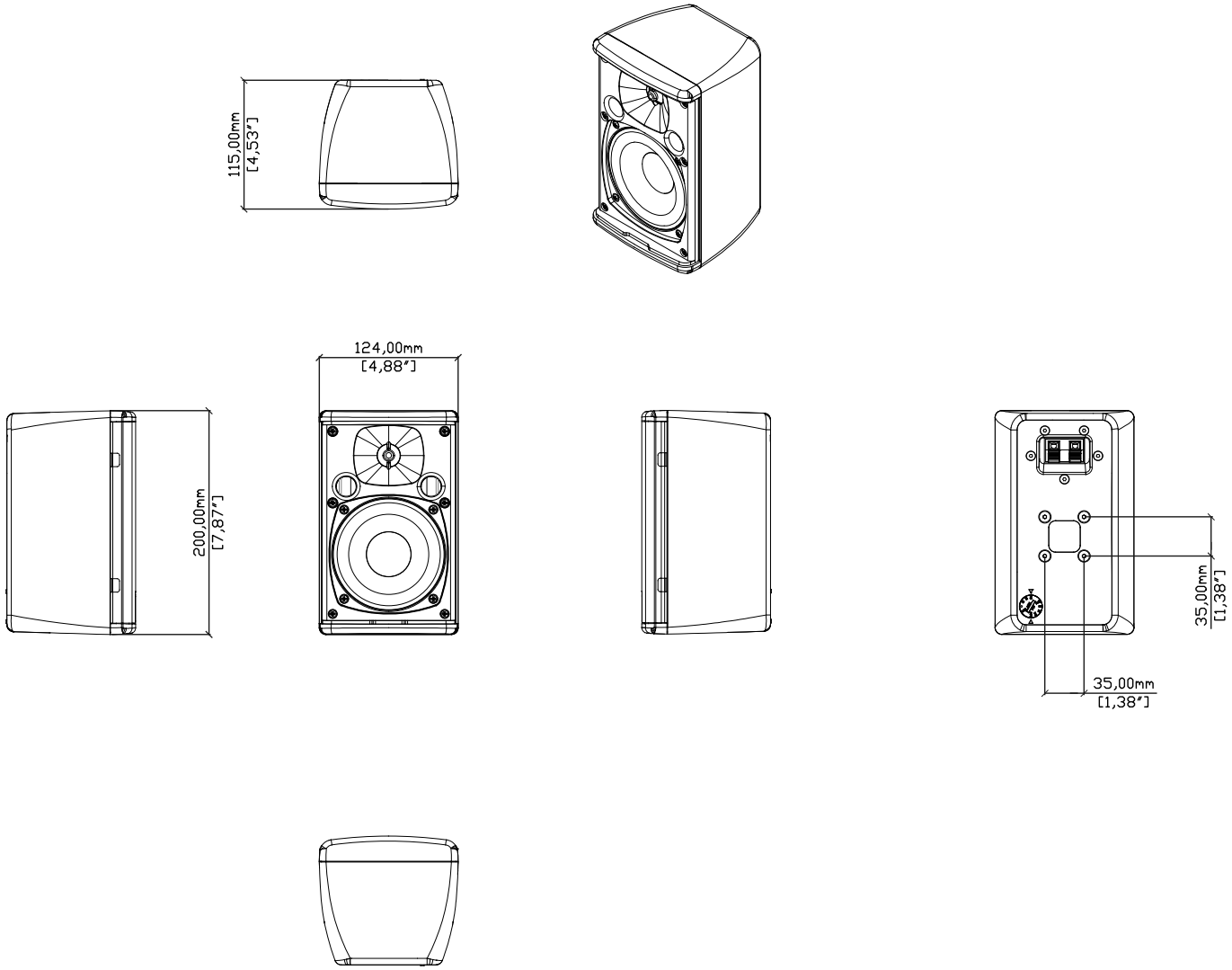

On-wall speaker A55

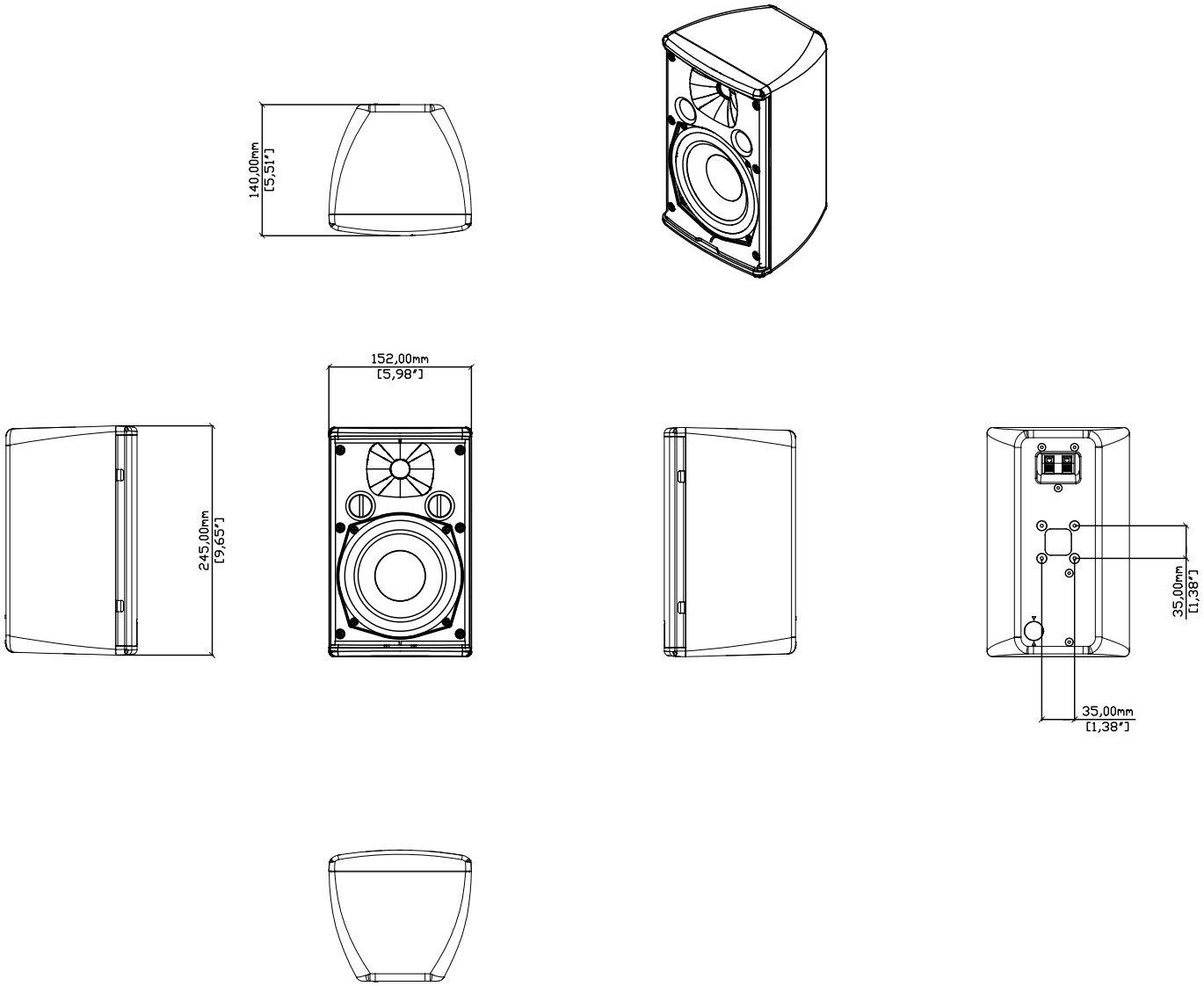

On-wall speaker A55T

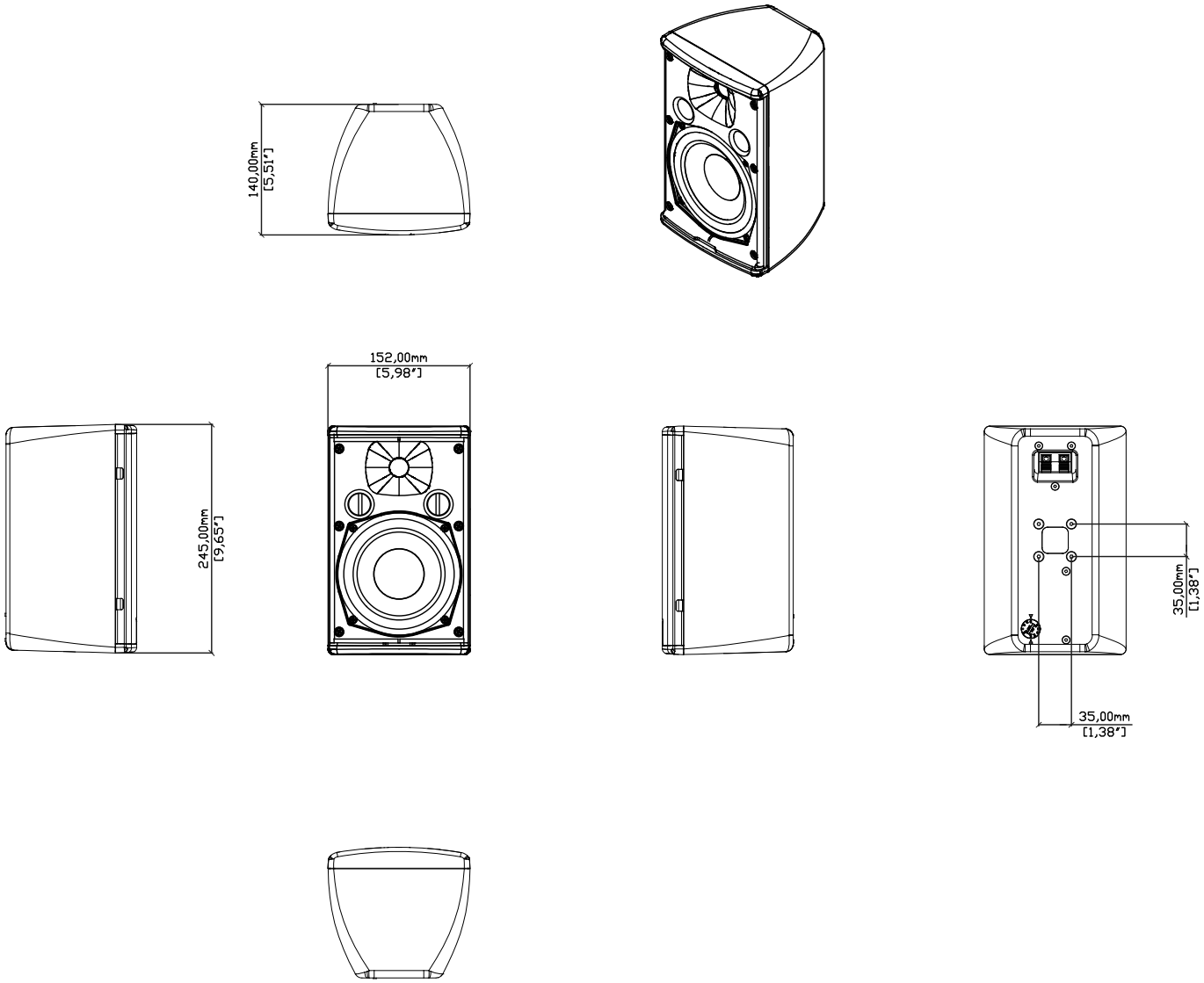

On-wall speaker A80T

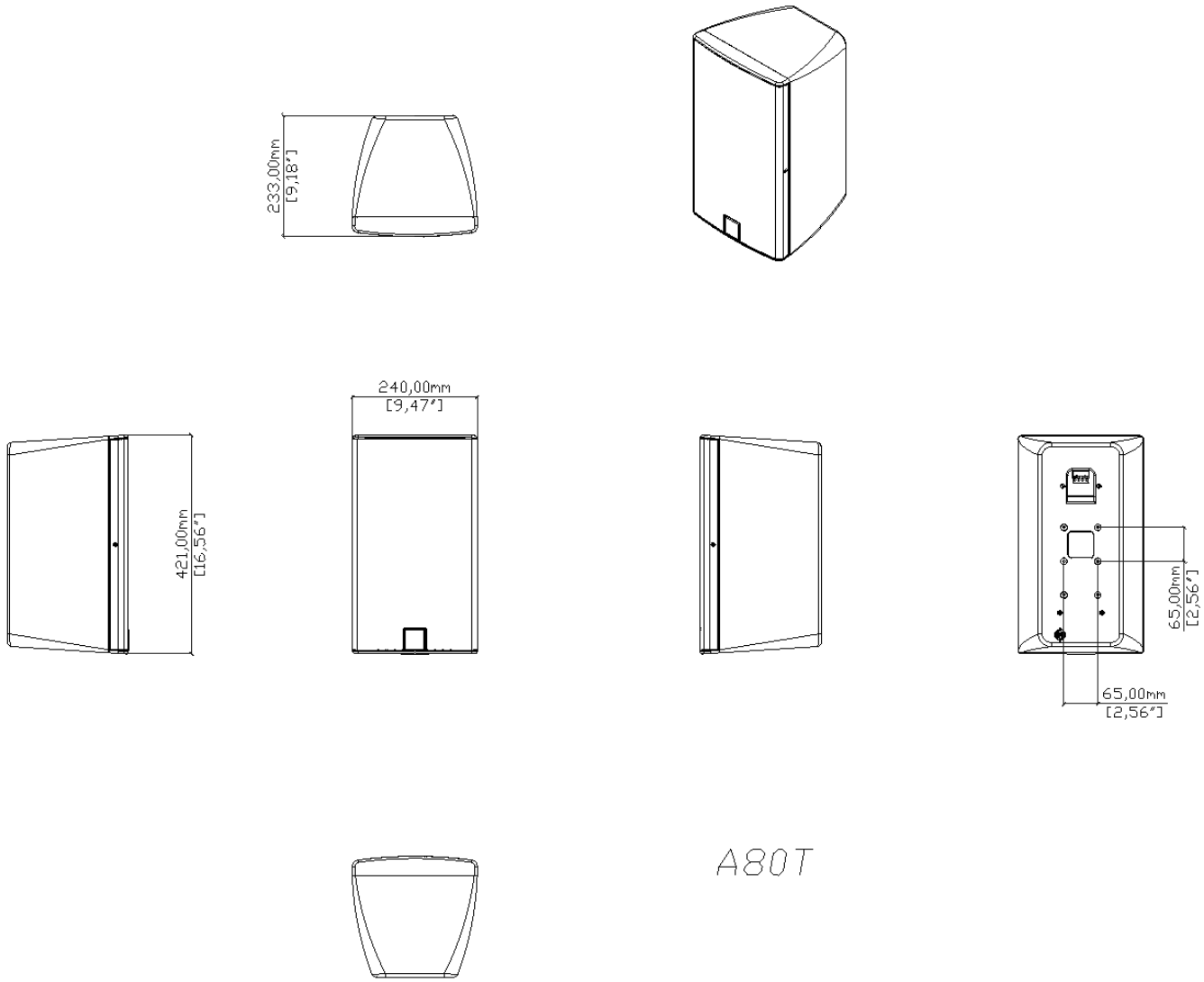

Ceiling speaker ACS-40TS

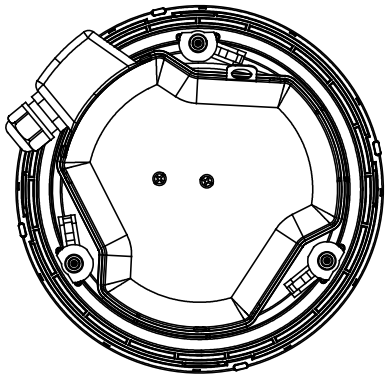

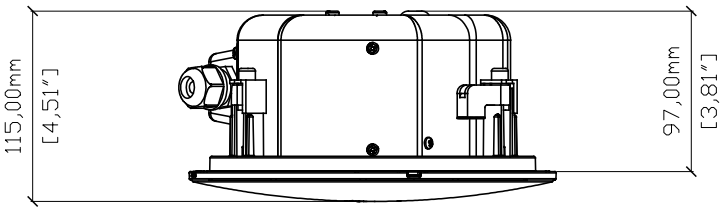

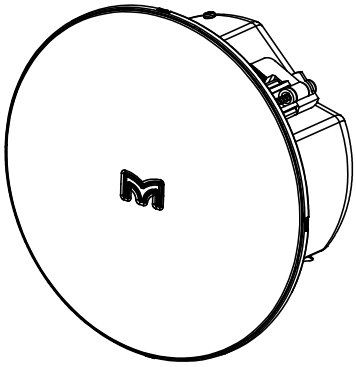

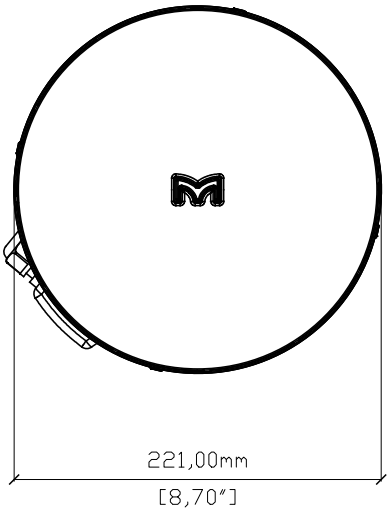

ACS-40TS

Ceiling speaker ACS-55TS

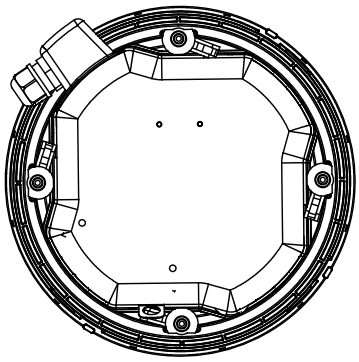

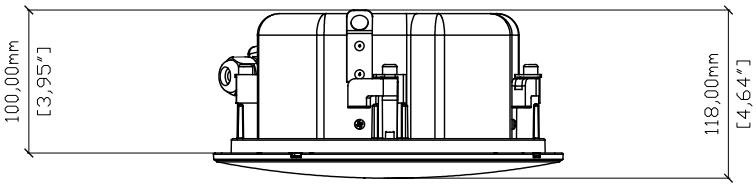

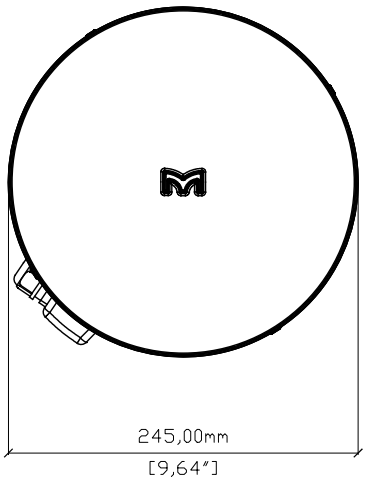

ACS-55TS

Ceiling speaker ACS-55T

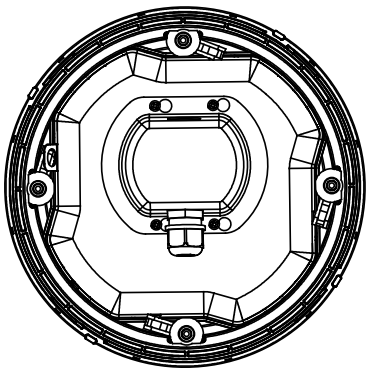

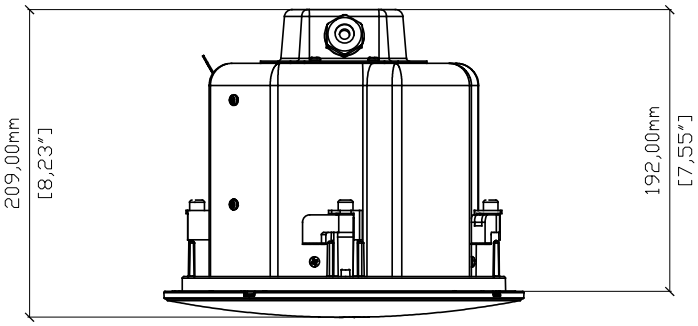

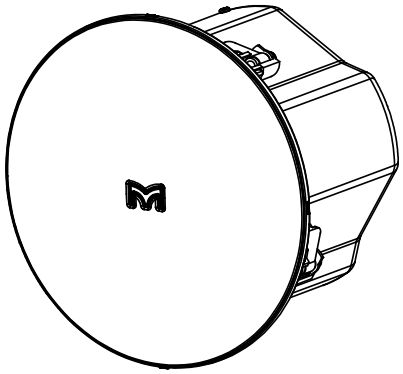

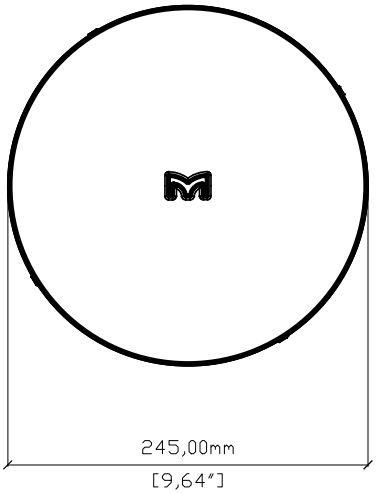

ACS-55T

Pendant speaker ACP-55T

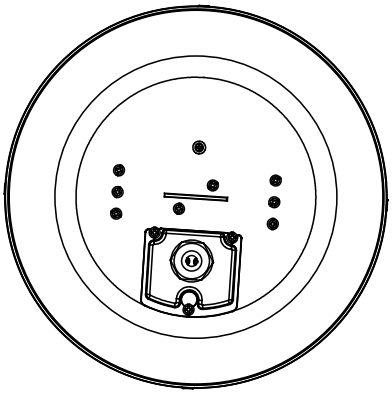

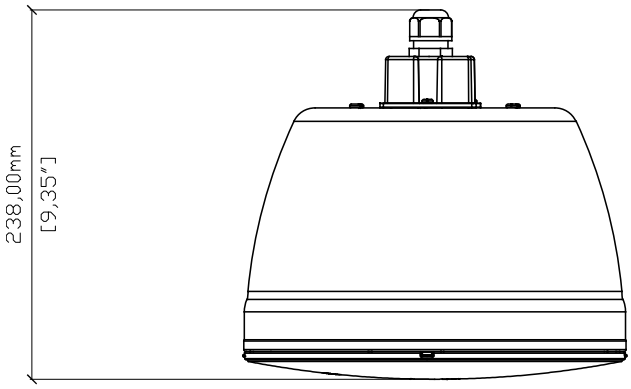

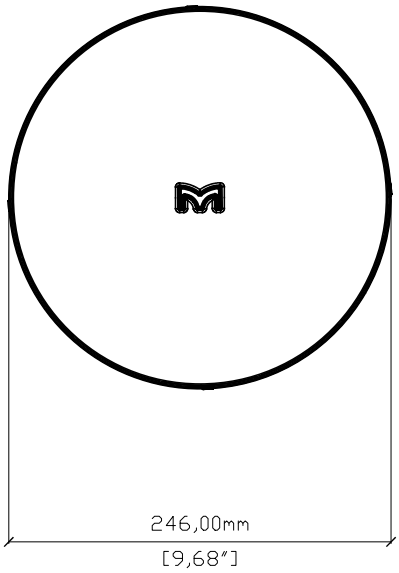

ACP-55T

Wall bracket ASM10001 (white) and ASM10002 (black)

Supplied with A40, A40T, A55 and A55T.

Wall fixing (square section with peg): four 5.2 mm (0.2 in) holes.

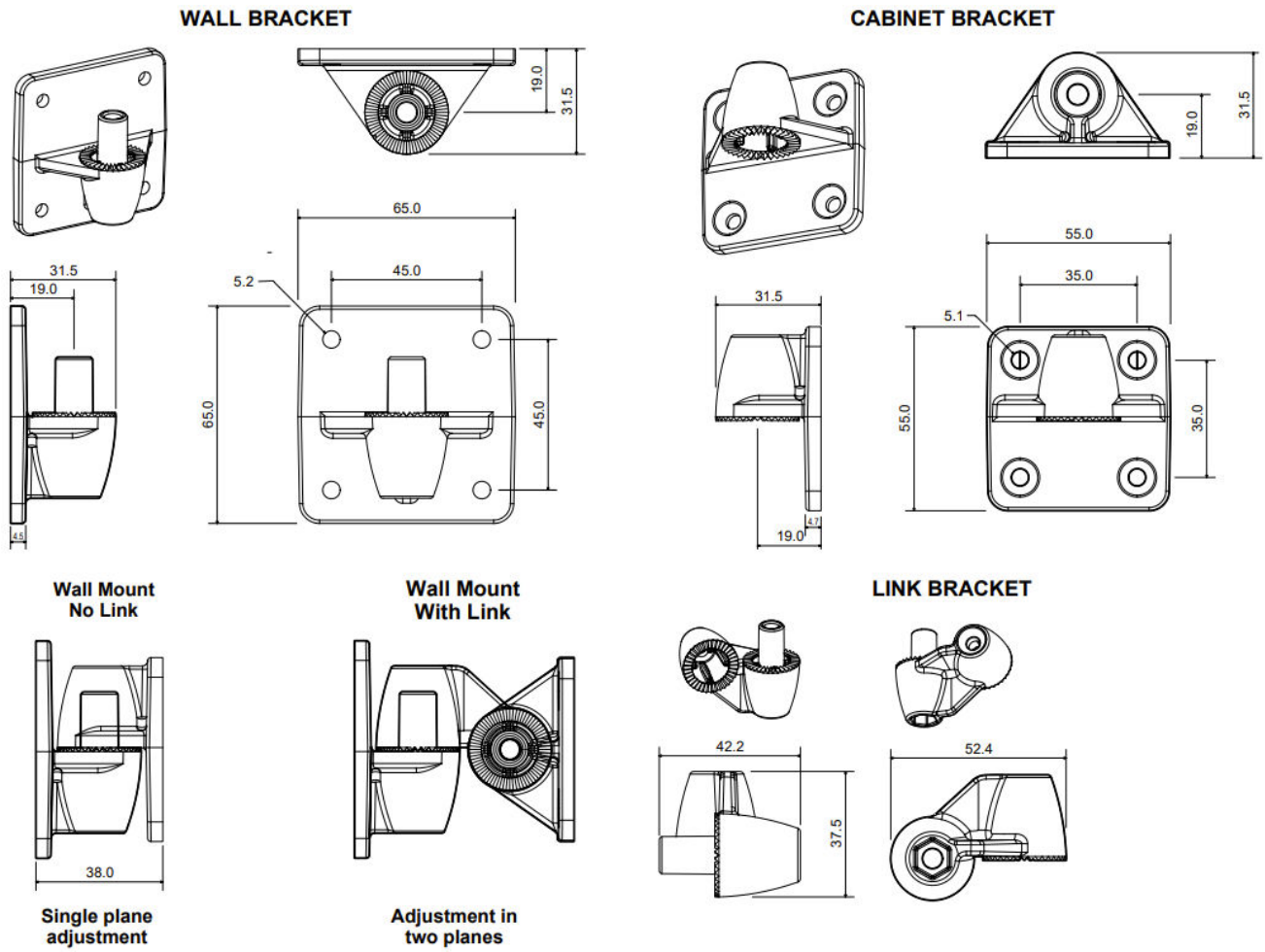

Wall bracket WB6/8

Supplied with A80T.

Wall fixing (the rectangular section): four 7 mm (0.28 in) holes

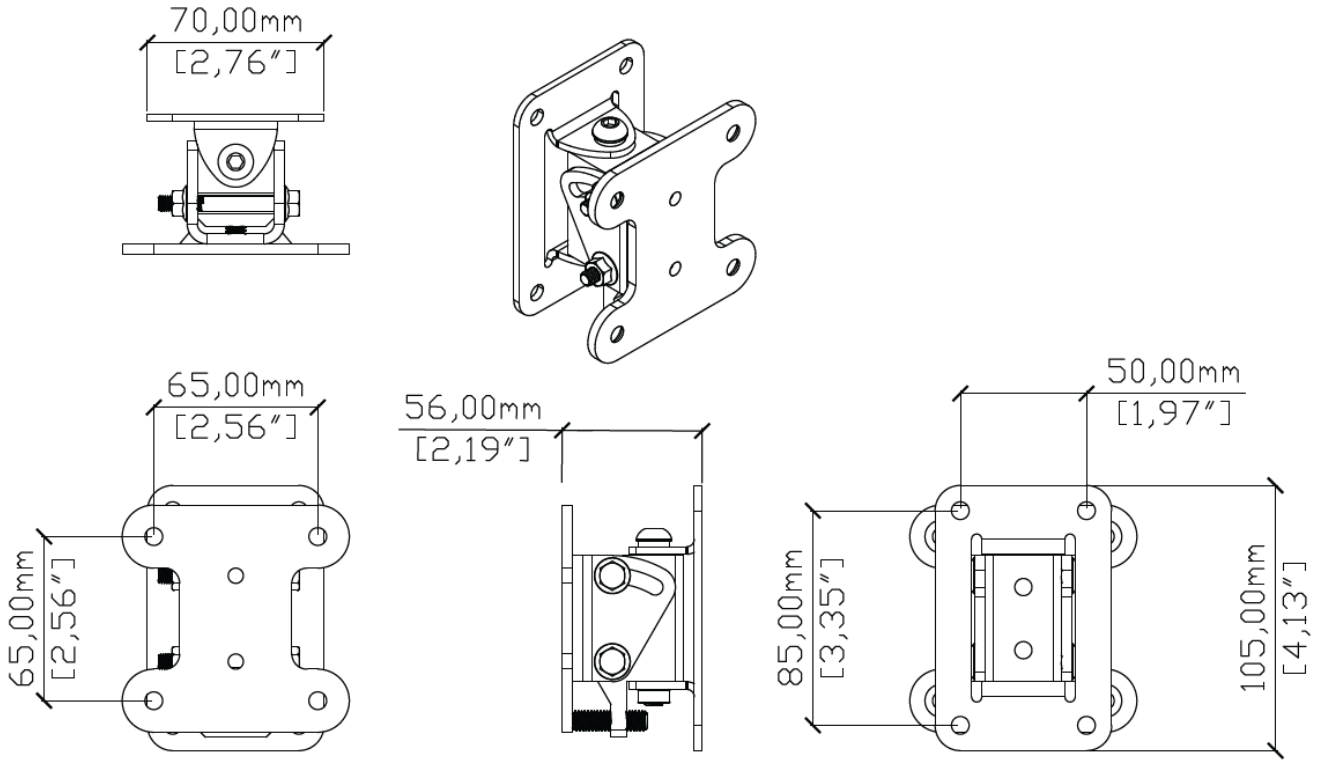

Ceiling bracket CDDCB5

Optional accessory for A40, A40T, A55 and A55T.

Ceiling fixing: three 5.5 mm (0.22 in) holes and central 8.5 mm (0.33 in) hole.

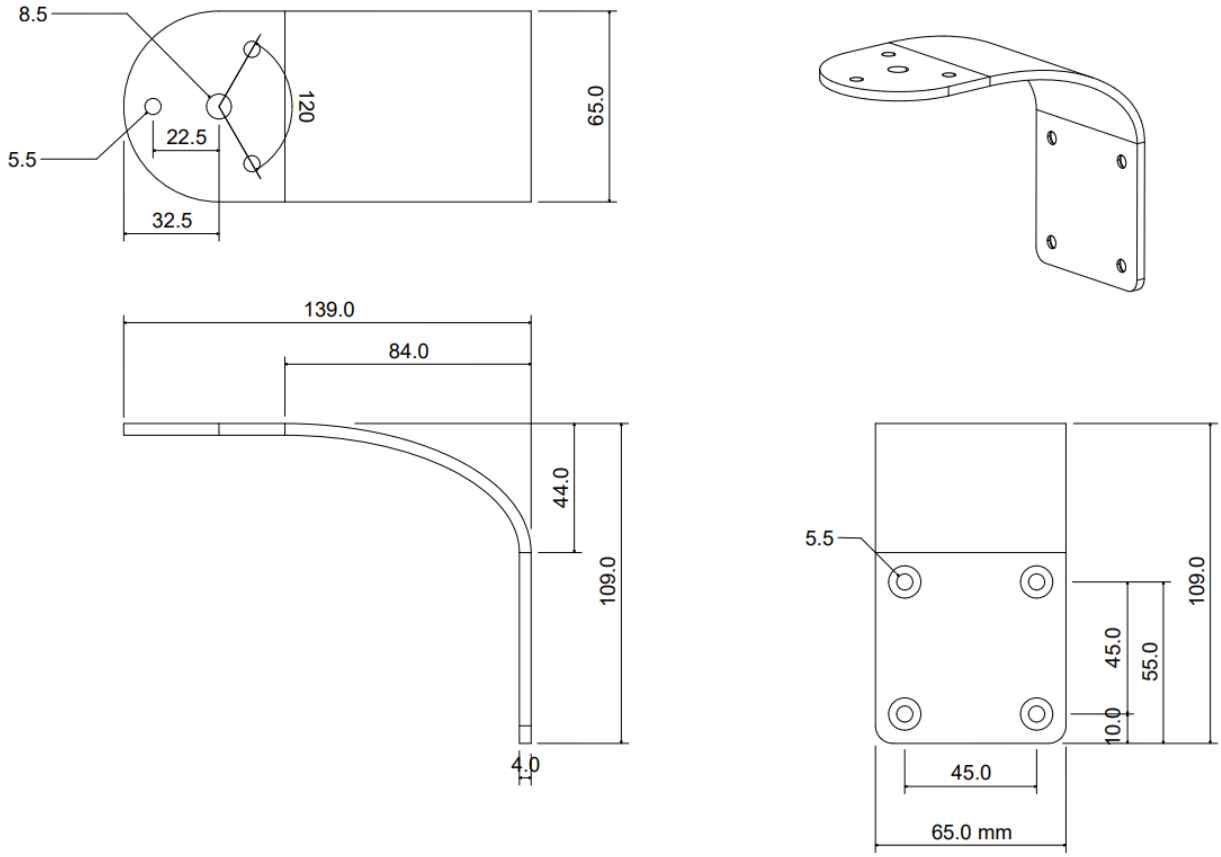

Ceiling bracket CDDCB6/8

Optional accessory for A80T.

Ceiling fixing: three 6.5 mm (0.26 in) holes and central 13 mm (0.51 in) hole.

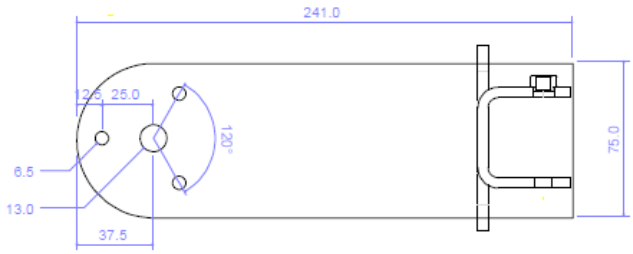

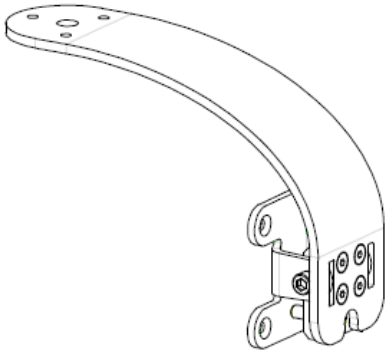

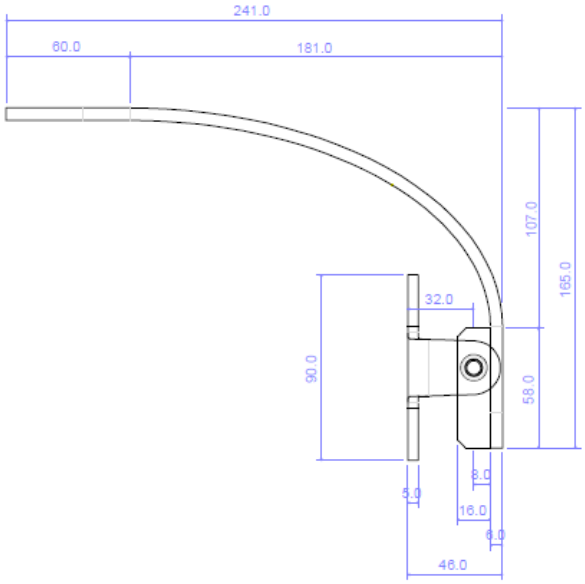

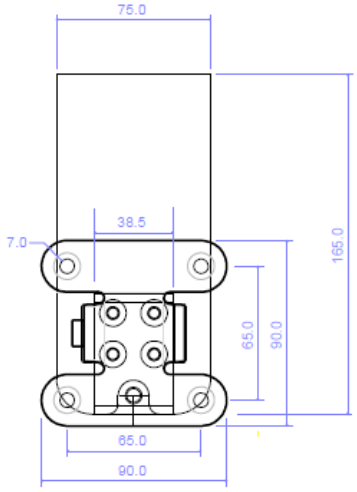

ADORN spare parts

The following spare parts are available through our dealers. Other spares may be available on request.

Model	Spare part	Part number
A80T, A80T-W	Bass driver	DLS8013
	HF driver	DCD10015
	Crossover	SCOS100008
	Transformer assembly	ASM100307
	Euroblock (Phoenix-style) 12 A connector with screw terminals This is Phoenix part GMSTB 2,5/ 4-ST (1766903)	PCX00006
	Black grille	ASM100284
	White grille	ASM100284-W
	Black wall bracket	WB6/8B
	White wall bracket	WB6/8W
A40, A40T, A55, A55T, A40-W, A40T-W, A55-W, A55T-W	Black wall bracket	ASM10002
	White wall bracket	ASM10001
	Current versions of these speakers use the same connector as the A80T. See above for details Previous versions of these speakers have push terminals	PCX00006
ACS-40TS-W, ACS-40TS-W-NL	White grille	ASF03008
	White grille, no logo	ASF03008-NL
ACS-55TS-W, ACS-55TS-W-NL, ACS-55T-W, ACS-55T-W-NL, ACP-55T-W	White grille	ASF03009
	White grille, no logo	ASF03009-NL
ACP-55T	Black grille	ASF03010
	Black grille, no logo	ASF03010-NL

Troubleshooting

- Sound not right. Make sure the input and output connectors are fully plugged into the sockets. Check the sound quality with headphones at the amplifier or preamp.

Technical support

For technical support, contact your supplier or Martin Audio. For Martin Audio technical support, visit martin-audio.com and select **Support > Support Contacts**.

Service

For service information, go to our website martin-audio.com and select **Support > Service & Returns**.

Warranty

For warranty information, go to our website martin-audio.com and select **Support > Service & Returns**.

Unpacking

After unpacking, carefully check your speakers for any signs of transit damage. If you find any issues, inform your dealer straight away. If possible, keep the packaging for future use.

Recycling

When the product reaches the end of its life, please dispose of it responsibly at a recycling centre.

Martin Audio Limited

Century Point

Halifax Road

Cressex Business Park

High Wycombe

Buckinghamshire

HP12 3SL

England

FOR SALES ENQUIRIES

UK

+44 1494 535 312

info@martin-audio.com

NORTH AMERICA

+1 323 381 5310

www.martin-audio.com

Martin Audio, the Martin Audio logo and Hybrid are registered trademarks of Martin Audio Ltd. in the United Kingdom, United States and other countries; all other Martin Audio trademarks are the property of Martin Audio Ltd.

MARTIN AUDIO
LONDON