Electro-Voice

EVID-S Surface Mount Loudspeakers

en Installation manual

Table of contents

1	**Safety**	**4**
1.1	Suspension	**4**
1.2	Notices	**4**
2	**Short information**	**5**
3	**Introduction**	**6**
3.1	System features	**6**
3.2	Packing list	**7**
3.3	Product information	**9**
4	**Installation and wiring**	**10**
4.1	Installing the speaker	**10**
4.2	Wiring	**16**
4.2.1	Wall bracket wiring	**16**
4.2.2	Alternative Euroblock connection	**16**
4.3	Transformer taps	**18**
4.3.1	EVID-S4.2T speaker 4” cabinet 70/100V	**18**
4.3.2	EVID-S5.2T speaker 5” cabinet 70/100V	**19**
4.3.3	EVID-S8.2T speaker 8” cabinet 70/100V	**20**
4.4	Replacing the logo	**20**
5	**Troubleshooting**	**22**
6	**Technical data**	**23**
6.1	EVID-S4.2/EVID-S4.2T speakers	**23**
6.1.1	Dimensions	**24**
6.1.2	Frequency response and impedance	**24**
6.2	EVID-S5.2/EVID-S5.2T speakers	**25**
6.2.1	Dimensions	**26**
6.2.2	Frequency response and impedance	**26**
6.3	EVID-S8.2/EVID-S8.2T speakers	**27**
6.3.1	Dimensions	**28**
6.3.2	Frequency response and impedance	**28**
7	**Wall bracket dimensions**	**29**
7.1	EVID-S4.2/EVID-S4.2T wall bracket dimensions	**29**
7.2	EVID-S5.2/EVID-S5.2T/EVID-S8.2/EVID-S8.2T wall bracket dimensions	**30**

1 Safety

1.1 Suspension

Warning!
Suspending any object is potentially dangerous and should only be attempted by individuals who have a thorough knowledge of the techniques and regulations of suspending objects overhead. Electro-Voice strongly recommends that loudspeakers be suspended taking into account all current national, federal, state, and local laws and regulations. It is the responsibility of the installer to ensure all loudspeakers are safely installed in accordance with all such requirements. When loudspeakers are suspended, Electro-Voice strongly recommends the system be inspected at least once per year or as laws and regulations require. If any sign of weakness or damage is detected, remedial action should be taken immediately. The user is responsible for making sure the wall, ceiling, or structure is capable of supporting all objects suspended overhead. Any hardware used to suspend a loudspeaker not associated with Electro-Voice is the responsibility of others.

Safety point
As an added safety measure, it is strongly recommended to utilize a properly rated secondary safety cable (provided by the installer) to securely fasten the speaker from the safety point on its back to a secondary mounting structure on the building.

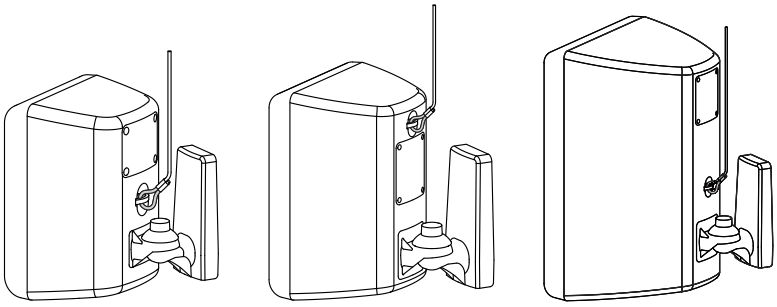

Figure 1.1: Redundant safety point - 4" (left), 5" (center), 8" (right)

1.2 Notices

Old electrical and electronic appliances
Electrical or electronic devices that are no longer serviceable must be collected separately and sent for environmentally compatible recycling (in accordance with the European Waste Electrical and Electronic Equipment Directive).
To dispose of old electrical or electronic devices, you should use the return and collection systems put in place in the country concerned.

Copyright and disclaimer
All rights reserved. No part of this document may be reproduced or transmitted in any form by any means, electronic, mechanical, photocopying, recording, or otherwise, without the prior written permission of the publisher. For information on getting permission for reprints and excerpts, contact Electro-Voice.
All content including specifications, data, and illustrations in this manual are subject to change without prior notice.

2 Short information

The following table lists products in a family, with CTN (Commercial Type Number) and identifying product name DESCRIPTION.

Woofer size	CTN	Description
4"	EVID-S4.2B	Speaker 4” cabinet 8 Ohm black pair
	EVID-S4.2W	Speaker 4” cabinet 8 Ohm white pair
	EVID-S4.2TB	Speaker 4” cabinet 70/100V black pair
	EVID-S4.2TW	Speaker 4” cabinet 70/100V white pair
5.25"	EVID-S5.2B	Speaker 5” cabinet 8 Ohm black pair
	EVID-S5.2W	Speaker 5” cabinet 8 Ohm white pair
	EVID-S5.2TB	Speaker 5” cabinet 70/100V black pair
	EVID-S5.2TW	Speaker 5” cabinet 70/100V white pair
8"	EVID-S8.2B	Speaker 8” cabinet 8 Ohm black pair
	EVID-S8.2W	Speaker 8” cabinet 8 Ohm white pair
	EVID-S8.2TB	Speaker 8” cabinet 70/100V black pair
	EVID-S8.2TW	Speaker 8” cabinet 70/100V white pair

3 Introduction

The EVID-S series from Electro-Voice is a line of compact, high-performance, two-way, full-range surface mount loudspeakers with excellent wide and uniform coverage, and outstanding performance. Their design makes these practically invisible for use in background and foreground music, paging, and sound reinforcement applications, making EVID-S ideal for indoor and outdoor applications, such as restaurants, bars, patios, retail, fitness clubs, hospitality, theme parks, leisure venues, and others. With unparalleled ease-of-installation, sturdy weather resistance, modern and delicate look, and flexible mounting options, the EVID-S series is the perfect solution for a wide variety of surface mount applications.
All EVID-S series full-range loudspeakers (except for the EVID-S5.2X) include a unique and innovative mount system from Electro-Voice, prepared to make any job easier. This mount system allows for 90 degrees of rotation horizontally and 45 degrees of rotation vertically. It comes already assembled and is easily installed on walls and ceilings. Its unique and innovative mount system makes every installation quick, simple, and reliable.
Read through this manual to familiarize yourself with the safety information, features, and applications before you use these products.

3.1 System features

EVID-S4.2/EVID-S4.2T

- Innovative mount system is included for quick, simple, and reliable installations
- Carefully engineered for outdoor environments (IP54), without compromising performance
- Long throw 4" (102 mm) woofer housed in a fire rated ABS plastic enclosure for extended LF performance down to 75 Hz
- 40 W power handling provides for 103 dB maximum SPL (109 dB peak)
- 70/100 V transformer version (EVID 4.2T) available for constant voltage systems

EVID-S5.2/EVID-S5.2T

- Innovative mount system is included for quick, simple, and reliable installations
- Carefully engineered for outdoor environments (IP54), without compromising performance
- Long throw 5.25" (133 mm) woofer housed in a fire rated ABS plastic enclosure for extended LF performance down to 60 Hz
- 75 W power handling provides for 109 dB maximum SPL (115 dB peak)
- 70/100 V transformer version (EVID 5.2T) available for constant voltage systems

EVID-S8.2/EVID-S8.2T

- Innovative mount system is included for quick, simple, and reliable installations
- Carefully engineered for outdoor environments (IP54), without compromising performance
- Long throw 8" (203 mm) woofer housed in a fire rated ABS plastic enclosure for extended LF performance down to 50 Hz
- 90 W power handling provides for 110 dB maximum SPL (116 dB peak)
- 70/100 V transformer version (EVID 8.2T) available for constant voltage systems

3.2 Packing list

Item	Quantity	Component
A	2	Speakers with speaker brackets attached
B	2	Wall mount brackets
C	2	Dust covers
D	1	Allen wrench
E	2	Grille logos (spare)
F	2	Safety screws for the mounting brackets
G	2	Safety screw caps for the mounting brackets
H	2	Covers for the locking bolt
I	1	Installation manual

Table 3.1: Components list for speakers without transformer

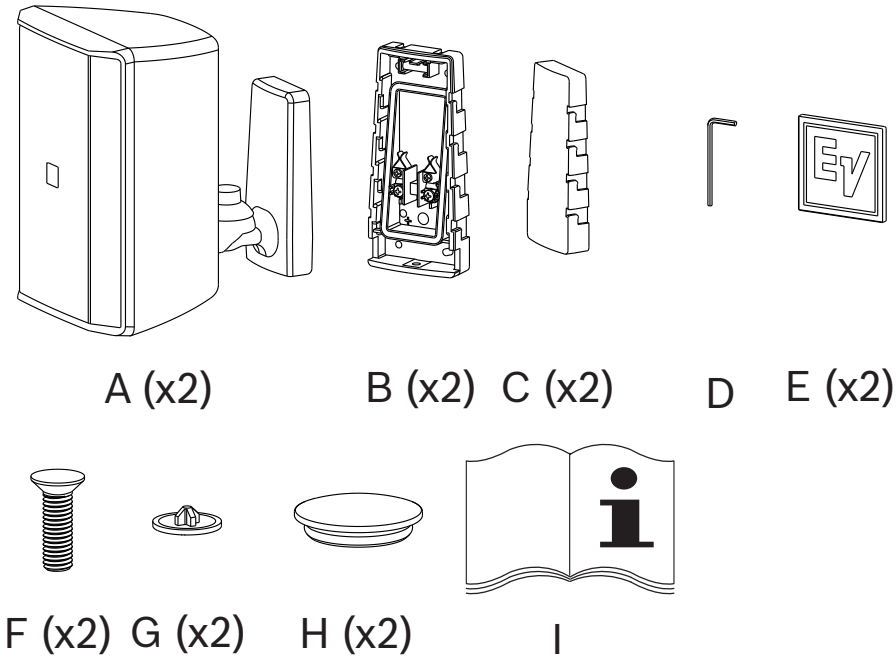

Figure 3.1: Components list for speakers without transformer

Item	Quantity	Component
A	2	Speakers with speaker brackets attached
B	2	Wall mount brackets
C	2	Dust covers
D	1	Allen wrench
E	2	Grille logos (spare)
F	2	Safety screws for the mounting brackets
G	2	Safety screw caps for the mounting brackets
H	2	Covers for the locking bolt
I	1	Installation manual
J	2	Flush input covers
K	8	Screws for flush input covers

Table 3.2: Components list for speakers with transformer

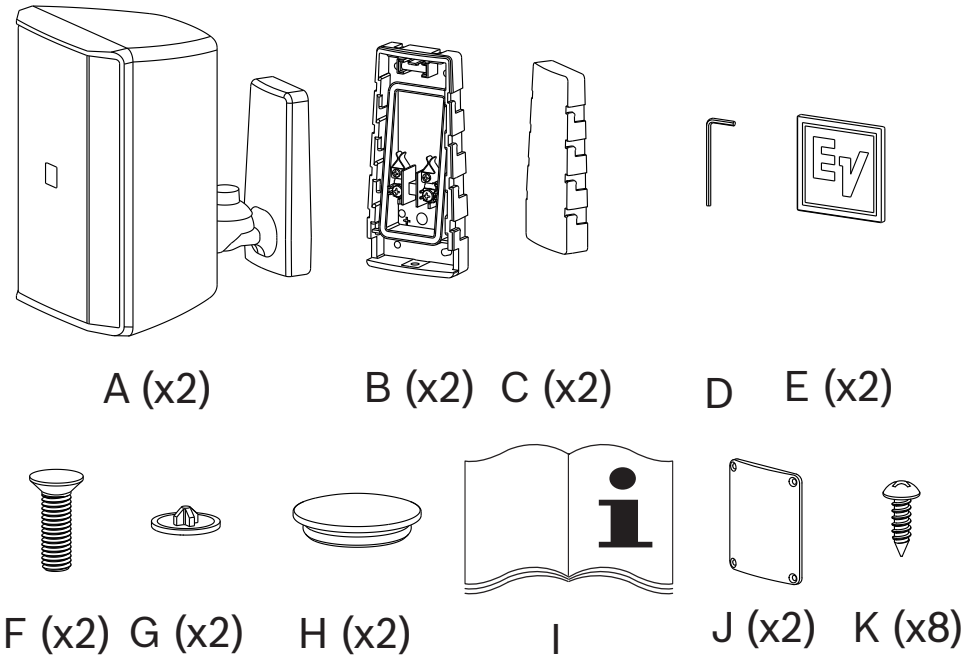

Figure 3.2: Components list for speakers with transformer

3.3 Product information

Item	Description
A	Grille
B	Bubble level
C	Wall bracket
D	Safety cable loop
E	Flush input cover
F	Audio wire hole
G	Locking bolt
H	Audio connector
I	Safety screw hole for bracket
J	Speaker bracket

Table 3.3: Product information for all models

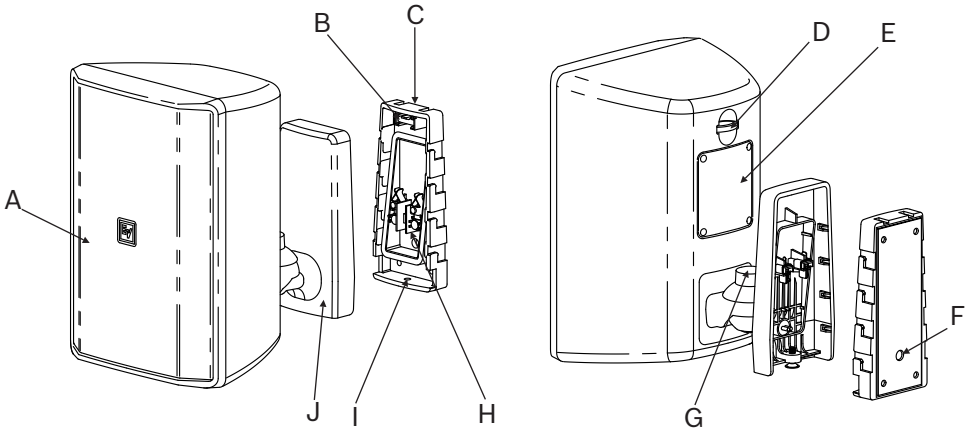

4 Installation and wiring

4.1 Installing the speaker

For safety, ensure the mounting surface supports more than the weight of the speaker. Use only industry-accepted fasteners and mounting methods when mounting the wall bracket. Consult an expert if you are unsure.

Caution!
It is the installer's responsibility to determine and use the proper mounting hardware for the wall construction type.
Disregarding this caution could result in damage to the product and personal injuries may occur.

Installing the wall bracket vertically

To **install the wall bracket vertically**, do the following:

1. Drill a **hole** into the **wall** for the wire.
   The size of the hole is dependent on the size of the wire used.
2. Push the **wire** thru the hole.
3. Adjust the **wall bracket** until the bubble is level.

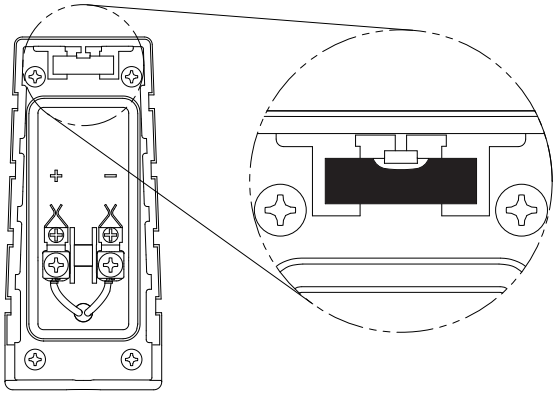

4. Install **four mounting screws** to secure the wall bracket to the wall.

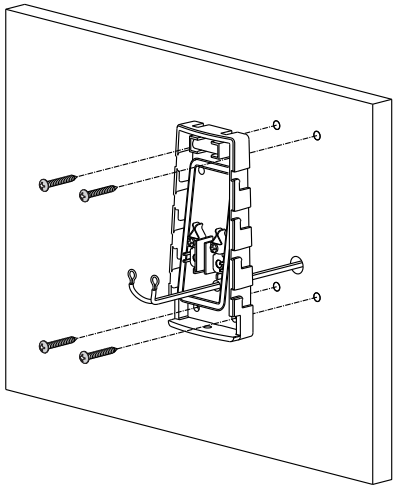

5. Connect the **wires** to wall bracket audio connectors, as shown in the wiring section.

Notice!
If the speaker installation will be delayed cover it with the paint shield/dust shield.

Installing the wall bracket horizontally

To **install the bracket horizontally**, do the following:

1. Draw a level **line**.
2. Align **screw holes** on the level line.
3. Mark the **position** of the wire hole.
4. Install **four mounting screws** to secure the wall bracket to the wall.

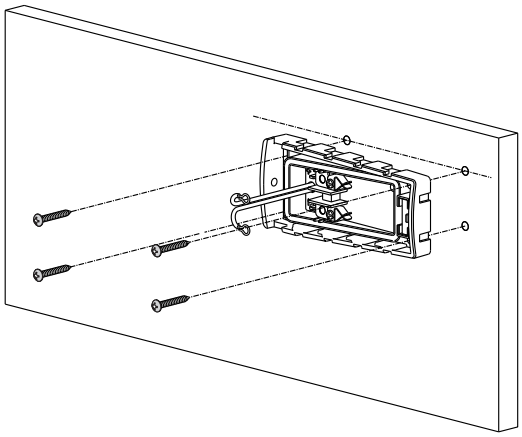

Notice!

If the speaker installation will be delayed cover it with the paint shield/dust shield.

Installing the speaker

To **install the speaker**, do the following:

1. Loosen the **locking bolt** with the Allen wrench (supplied).
2. Adjust the **horizontal and vertical position** of the bracket.

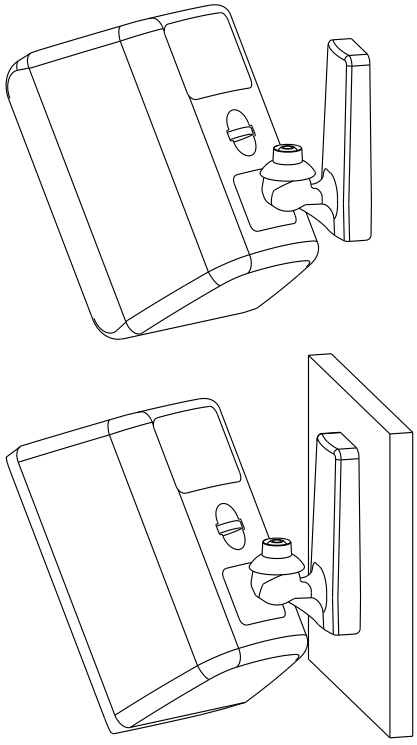

3. Tighten the **locking bolt** with an Allen wrench (supplied).
   If available, we recommend using an Allen wrench with a longer handle to make it easier to apply the necessary force to achieve the recommended torque. See , page 14

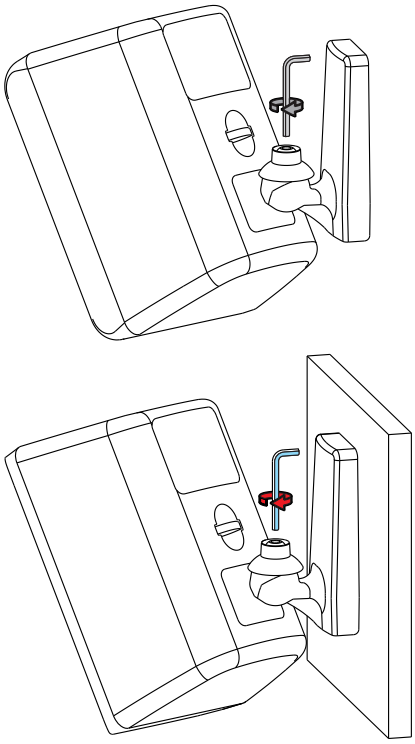

4. Push the **speaker bracket** onto the wall bracket.

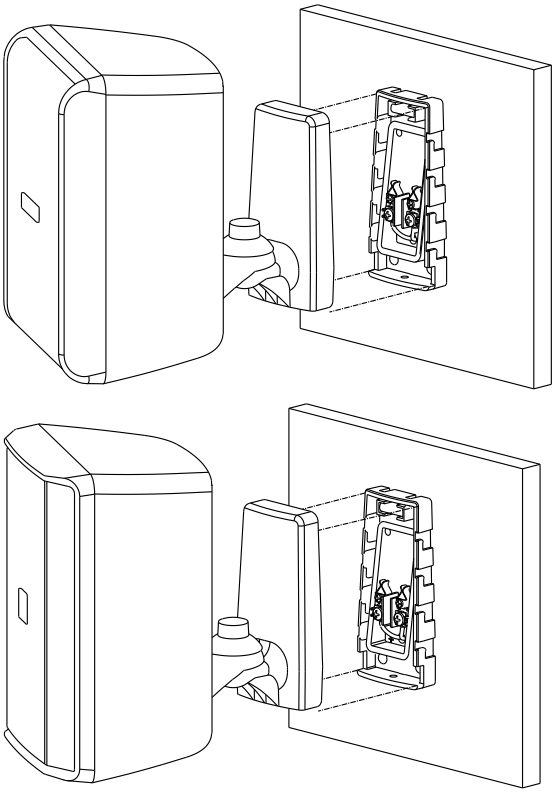

5. Slide the **speaker bracket** down to secure bracket to the wall bracket.
   This secures the bracket and makes electrical connection.

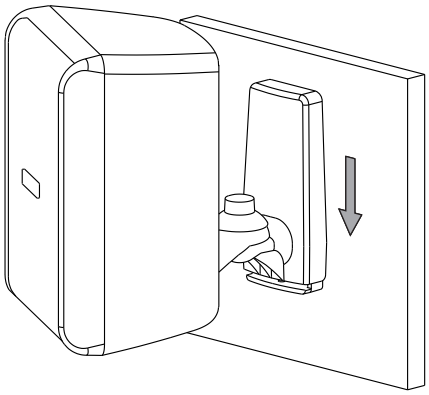

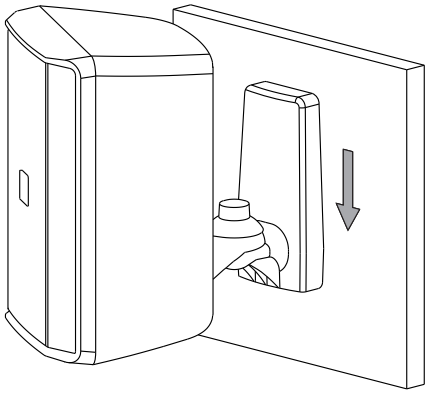

6. Install the **safety screw and screw cap**.

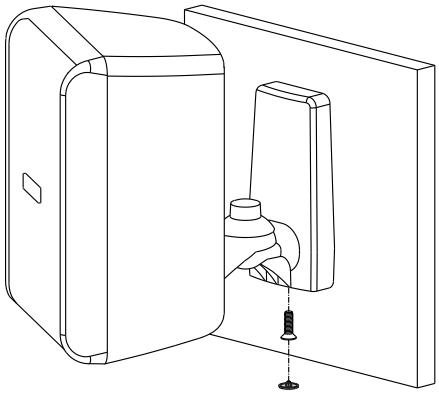

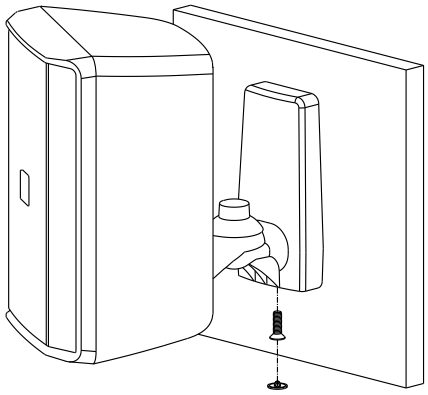

7. Readjust the horizontal and vertical **speaker** position, if needed.

8. Install the **locking bolt cap**.

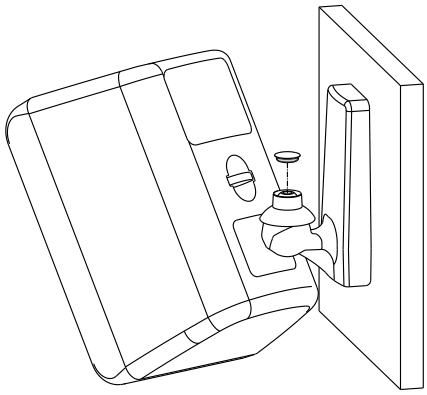

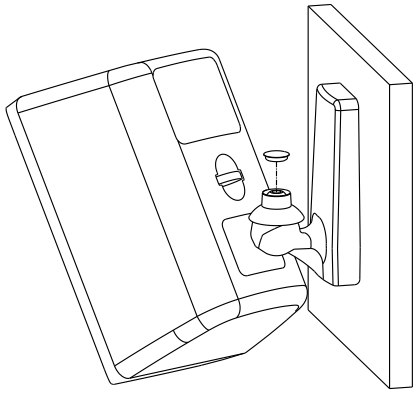

Speaker size	Recommended torque
4" speakers	62-75 in.-lb. (7.0-8.5 N-m)
5.25" speakers	66-80 in.-lb. (7.5-9.0 N-m)
8" speakers	66-80 in.-lb. (7.5-9.0 N-m)

Table 4.4: Recommended torque

9. Install a **secondary safety cable** to the safety point.

As an added safety measure, it is strongly recommended to utilize a properly rated secondary safety cable (provided by the installer) to securely fasten the speaker from the safety point on its back to a secondary mounting structure on the building.

Caution!
The safety point (auxiliary support ring) is not intended for primary suspension of the loudspeaker. The safety point should only be used as a secondary safety point.

Caution!
Surface mount speaker’s safety cable
The safety cable should be installed with as little slack as possible. Less than 1 in (25.4 mm) is preferable.

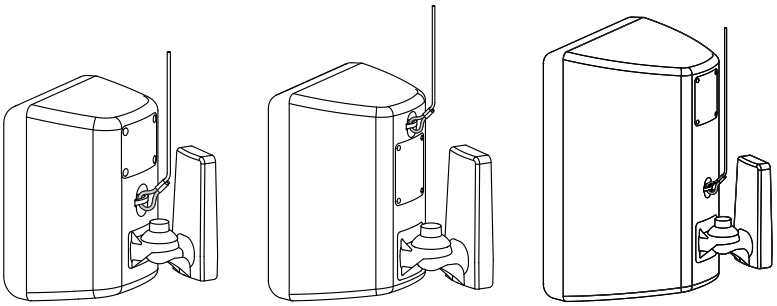

Figure 4.1: Redundant safety point - 4" (left), 5" (center), 8" (right)

4.2 Wiring

4.2.1 Wall bracket wiring

The wall bracket and speaker can be wired using either 2-wires, for input only, or 4-wires, for input and parallel output.

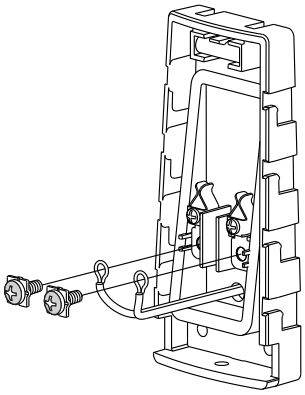

Figure 4.2: Wall bracket wiring - 2-wires, for input only

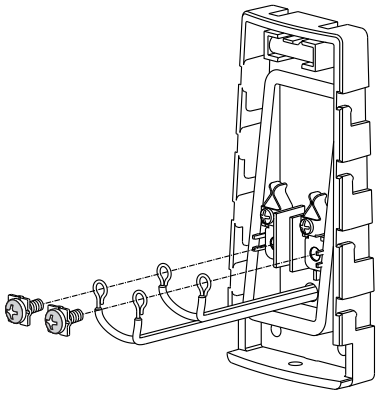

Figure 4.3: Wall bracket wiring - 4-wires, for input and parallel output

Reference the polarity markers on the wall bracket. Ensure the wiring screws are tightened securely to the connectors on the wall bracket.

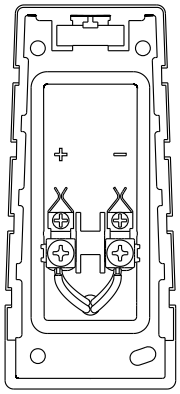

Figure 4.4: Wall bracket wiring - front view

4.2.2 Alternative Euroblock connection

Notice!

These instructions apply to the speakers with and without transformers, transformer version shown. Available for all models except EVID-S4.2T.

Wiring the speaker using the Euroblock connector

To **wire the speaker using Euroblock connector**, do the following:

1. Wire the **Euroblock connector**.

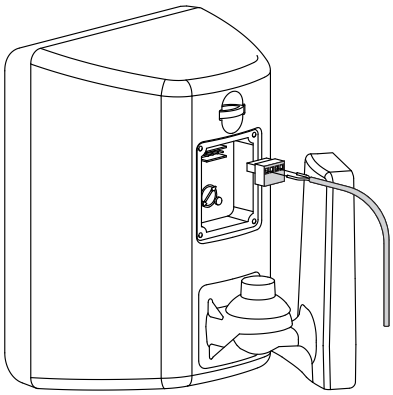

2. Adjust the **tap settings**, if needed.
3. Mount the **speaker**, as shown in the installation section.
4. Plug the **Euroblock connector** into the speaker.
5. Readjust the **horizontal or vertical speaker** position.

Wiring the speaker using the Euroblock connector and weather cover – optional accessory

To **wire the speaker using Euroblock connector and weather cover**, do the following:

1. Push the **wire** through the gland nut.

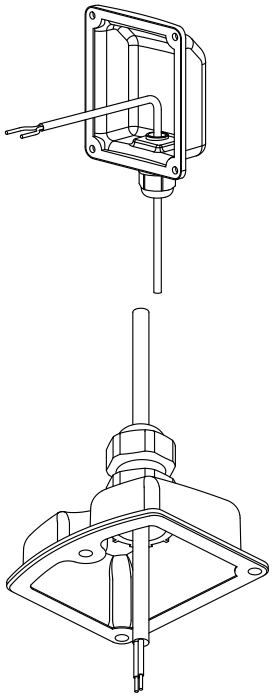

2. Wire the **Euroblock connector (A)**.

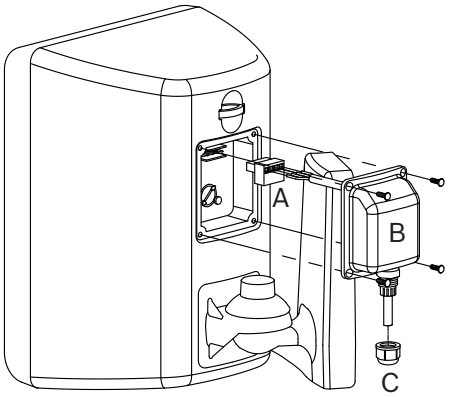

3. Adjust the **tap settings**, if needed.
4. Mount the **speaker**, as shown in the installation section.
5. Plug the **Euroblock connector** into the speaker.
6. Insert the **four screws** into the weather cover (B).
   Loosely tighten the four screws to keep the weather cover in place.
7. Tighten all **four screws** to secure the weather cover.
   Ensure the weather cover is secure.
8. Adjust the **wire** length.
9. Tighten the **gland nut (C)**.
10. Readjust the **horizontal or vertical speaker** position.

Refer to

– *Installing the speaker, page 10*

4.3 Transformer taps

You can select the mode of operation for all models that have a transformer. For the EVID-S4.2T you can select the power tap for 70V/100V operation by using the jumper connector in the Euroblock on the input panel. For the EVID-S5.2T and the EVID-S8.2T you can select the mode of operation (70V/100V/8 ohm) and power taps using the rotary switch on the input panel.

4.3.1 EVID-S4.2T speaker 4” cabinet 70/100V

Configuring the transformer settings

To **configure the transformer settings**, do the following:

1. Remove the **Euroblock connector** from the input panel.

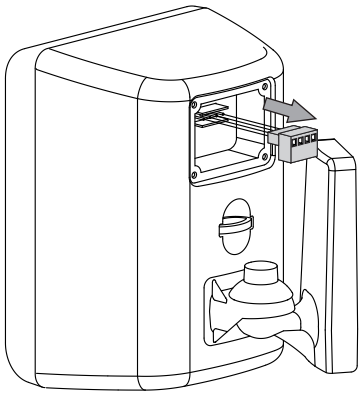

2. Wire the **jumper connector** in the Euroblock, according to the desired transformer settings.

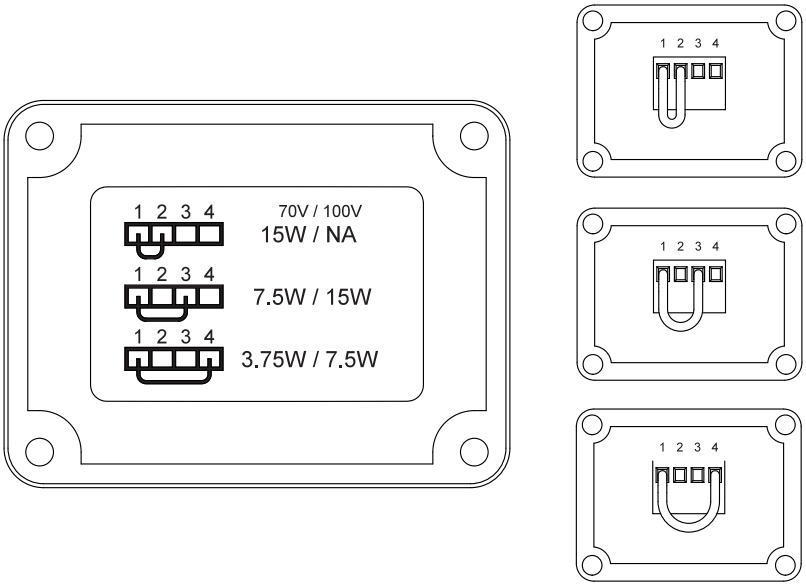

3. Plug the **Euroblock connector** into the input panel.
4. Attach the **flush input cover (A)**.

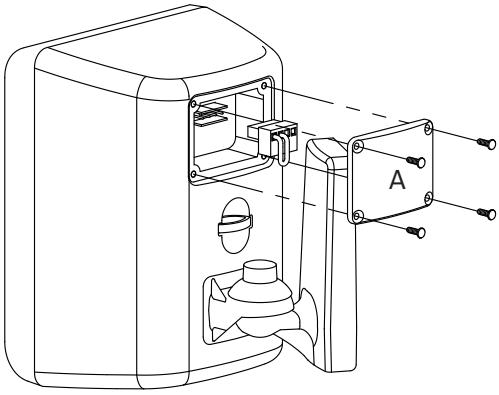

4.3.2 EVID-S5.2T speaker 5” cabinet 70/100V

Configuring the transformer settings

To **configure the transformer settings**, do the following:

1. Select the desired **power tap** by using the rotary switch on the input panel.

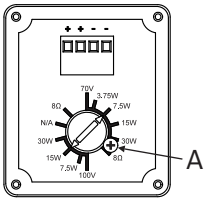

2. If 8 ohm mode is desired, remove the **safety screw**.
   Safety screw (A) is shown in the previous step.

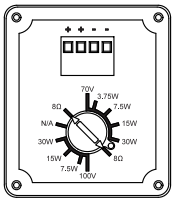

3. Attach the **flush input cover (B)**.

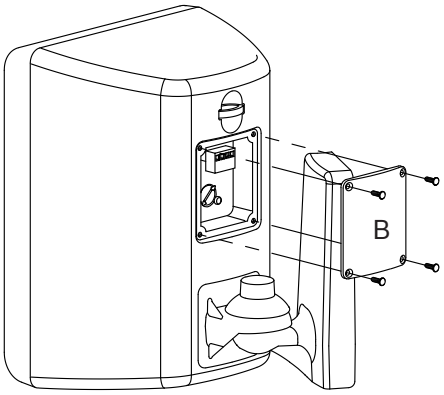

4.3.3 EVID-S8.2T speaker 8” cabinet 70/100V

Configuring the transformer settings

To **configure the transformer settings**, do the following:

1. Select the desired **power tap** by using the rotary switch on the input panel.

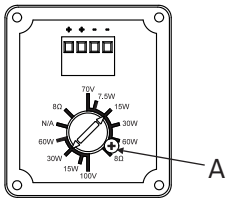

2. If 8 ohm mode is desired, remove the **safety screw**.
   Safety screw (A) is shown in the previous step.

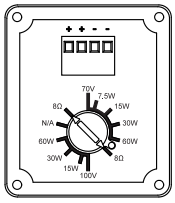

3. Attach the **flush input cover (B)**.

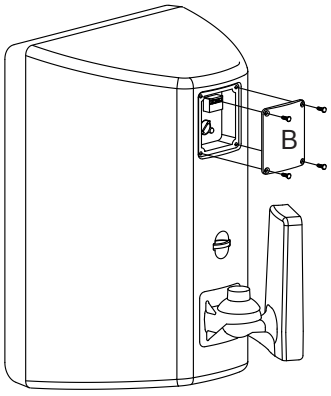

4.4 Replacing the logo

An additional logo is included, horizontal installation is shown.

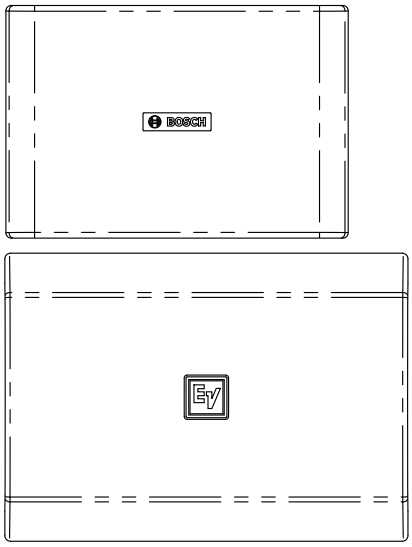

To **replace the logo**, do the following:

1. Remove the existing **logo**.
2. Clean the **surface** with alcohol.
3. Align the **logo** with the square guide.

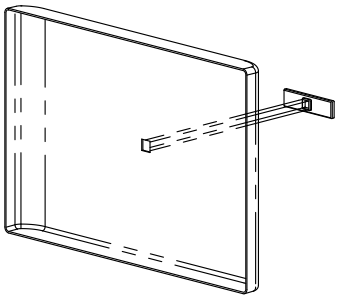

4. Align the **logo** with the logo recess on the grille.
5. Remove the **paper backing**.
6. Insert the **logo**.

   Press firmly to ensure the logo is applied.

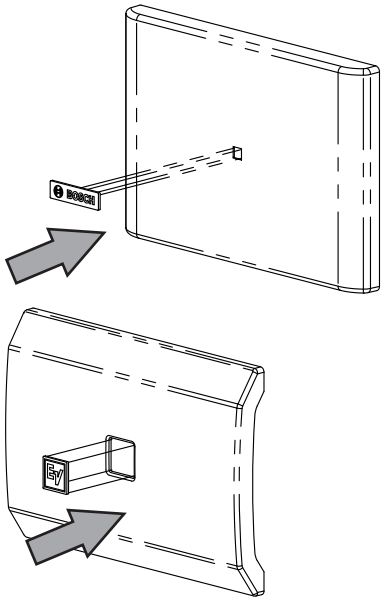

5 Troubleshooting

Problem	Possible Causes	Action
No Sound	Amplifier	Connect a known working test speaker to the amplifier outputs. If there is no sound, check all electronics are on, the signal routing is correct, the source is active; the volume is turned up, and so on. Correct/Repair/Replace as necessary. If there is sound, the problem is in the wiring.
	Wiring	Verify you have connected the correct wire pairs to the amplifier. Play something at low level through the amplifier (for example, from a CD player or tuner). Connect the test speaker in parallel with the malfunctioning line. If the sound has gone or is very weak, the line has a short in it (possibly a severe scrape, pinch, or staple puncture). If the sound level is normal the wire is open (possibly a cut wire or missed connection). Using the test speaker, move down the line and test each connection/junction until you find the problem and correct it. Observe proper polarity.
		Verify you have the inputs and outputs connected to the correct wires. If the subwoofer input panel is not correctly wired, there will be little or no sound. Observe proper polarity.
Poor Low-Frequency Response	Speakers Wired Out-of-Polarity	When two speakers are connected out of polarity (out of phase), the low frequencies will cancel each other acoustically. Carefully observe the wire markings or tracers on your speaker wires. Verify the amplifier (+) terminal is connected to the red speaker terminals and the amplifier (-) terminal is connected to the black speaker terminals.
	Improperly Wired Subwoofer Panel	Using a test speaker as described above, verify all amplifier and speaker wires are connected to their proper terminals with the correct polarity. Reversing just one set of amplifier wires can cut out all bass output from the subwoofer.
Intermittent Output such as, Crackling or Distortion	Faulty Connection	Check all connections at amplifier and speakers to ensure they are clean and tight. If the problem persists, it may be in the amplifier or wiring. See other actions above.
Constant Noise such as Buzzing, Hissing, Humming	Defective Amplifier or other Electronic Device	If the noise is present but no program material is playing, the likely cause is the signal chain in the electronics. Evaluate each component as necessary to isolate the problem.
	Poor System Grounding or Ground Loop	Check and correct the system grounding, as required.

If these suggestions do not solve your problem, contact your nearest Electro-Voice dealer or Electro-Voice distributor.

6 Technical data

6.1 EVID-S4.2/EVID-S4.2T speakers

	EVID-S4.2	EVID-S4.2T
Frequency response (-3 dB):	100 Hz – 20 kHz[1]	100 Hz – 20 kHz[1]
Frequency response (-10 dB):	75 Hz – 20 kHz[1]	75 Hz – 20 kHz[1]
Sensitivity:	87 dB[2]	86.5 dB[2]
Max SPL (calculated):	103 dB (109 dB Peak)	98.5 dB (104.5 dB Peak)
Coverage angle:	Horizontal 110°, Vertical 110°	
Power handling:	40 W (160 W Peak) Continuous Pink Noise (100 hours)	15 W (60 W Peak) Continuous Pink Noise (100 hours)
Low Z:	Yes	No
Nominal impedance:	8 Ω	N/A
Minimum impedance:	6 Ω	N/A
Recommended High-Pass:	70 Hz (24 dB/octave)	
Input transformer (70V/100V):	No	15 W
Transformer taps:	N/A	70 V: 3.7 W, 7.5 W, 15 W 100 V: 7.5 W, 15 W
LF transducer:	4 inch (102 mm)	
HF transducer:	0.75 inch (20 mm)	
Connectors:	Captive screws on wall bracket. Removable locking 4-pin connector (Euroblock) – (2) for connection to additional speakers in a distributed line. Max. wire size 12AWG (2.5 mm).	Captive screws on wall bracket. Max. wire size 12AWG (2.5 mm).
Environmental:	IP54 (per IEC-60529)	
Color:	Black (RAL 9004) or white (RAL 9003)	
Dimensions (H x W x D):	193 mm x 140 mm x 118 mm (7.6 in x 5.5 in x 4.7 in)[3]	
Net weight:	1.5 kg (3.3 lb)	1.8 kg (4.0 lb)
Shipping weight (pair):	5 kg (11.0 lb)	5.4 kg (11.9 lb)
Included hardware:	Mounting bracket and 4-mm Allen wrench	
Packaged quantity:	2	

[1]Half-space (wall mounting).

[2]Half-space (on wall) averaged 100 Hz - 10 kHz, 1 W.

[3]Without brackets.

6.1.1 Dimensions

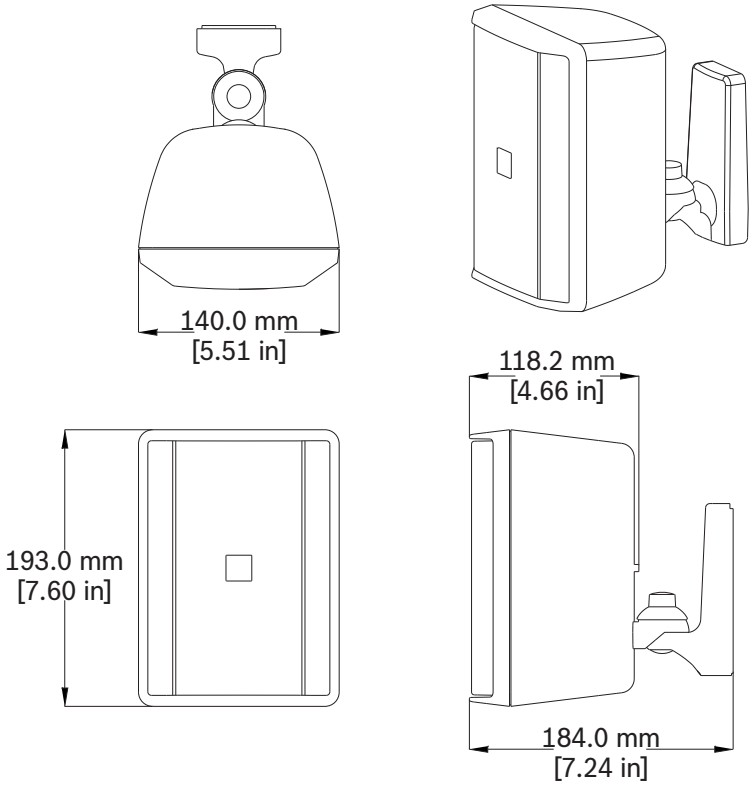

Figure 6.1: EVID-S4.2/EVID-S4.2T dimensions

6.1.2 Frequency response and impedance

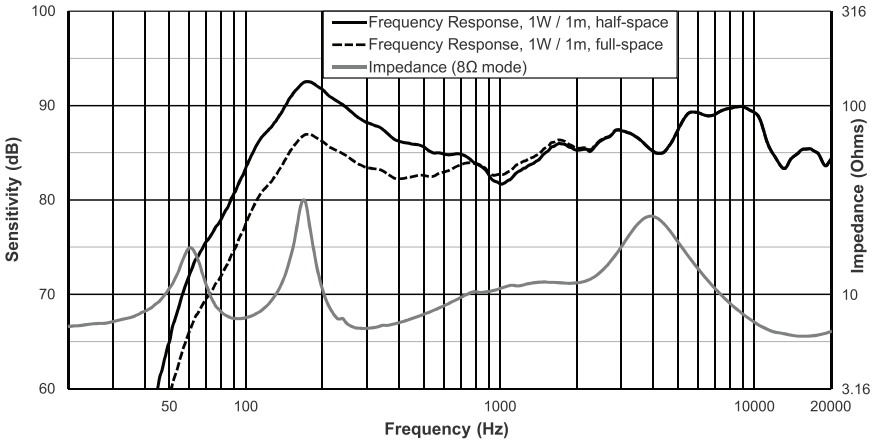

Figure 6.2: EVID-S4.2/EVID-S4.2T frequency response and impedance

6.2 EVID-S5.2/EVID-S5.2T speakers

	EVID-S5.2	EVID-S5.2T
Frequency response (-3 dB):	85 Hz – 20 kHz[1]	
Frequency response (-10 dB):	60 Hz – 20 kHz[1]	
Sensitivity:	90 dB[2]	
Max SPL (calculated):	109 dB (115 dB Peak)	
Coverage angle:	Horizontal 90°, Vertical 90°	
Power handling:	75 W (300 W Peak) Continuous Pink Noise (100 hours)	
Low Z:	Yes	
Nominal impedance:	8 Ω	
Minimum impedance:	6 Ω	
Recommended High-Pass:	60 Hz (24 dB/octave)	
Input transformer (70 V/100 V):	No	30 W
Transformer taps:	N/A	70 V: 3.7 W, 7.5 W, 15 W, 30 W, 8 Ω 100 V: 7.5 W, 15 W, 30 W, 8 Ω
LF transducer:	5.25 inch (133 mm)	
HF transducer:	0.75 inch (20 mm)	
Connectors:	Captive screws on wall bracket. Removable locking 4-pin connector (Euroblock) – (2) for connection to additional speakers in a distributed line. Max. wire size 12AWG (2.5 mm)	
Environmental:	IP54 (per IEC-60529)	
Color:	Black (RAL 9004) or white (RAL 9003)	
Dimensions (H x W x D):	255 mm x 180 mm x 151 mm (10.0 in x 7.1 in x 6.0 in)[3]	
Net weight:	2.7 kg (5.9 lb)[3]	3.2 kg (7.0 lb)[3]
Shipping weight (pair):	6.7 kg (14.8 lb)	7.9 kg (17.5 lb)
Included hardware:	Mounting bracket and 5-mm Allen wrench	
Packaged quantity:	2	

[1]Half-space (wall mounting).
[2]Half-space (on wall) averaged 100 Hz - 10 kHz, 1 W.
[3]Without brackets.

6.2.1 Dimensions

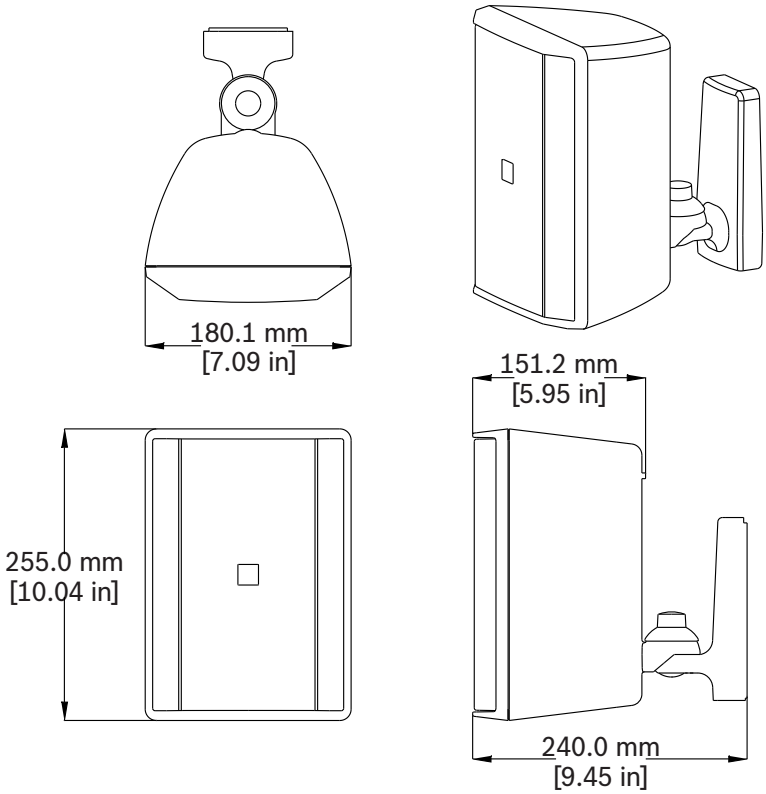

Figure 6.3: EVID-S5.2/EVID-S5.2T dimensions

6.2.2 Frequency response and impedance

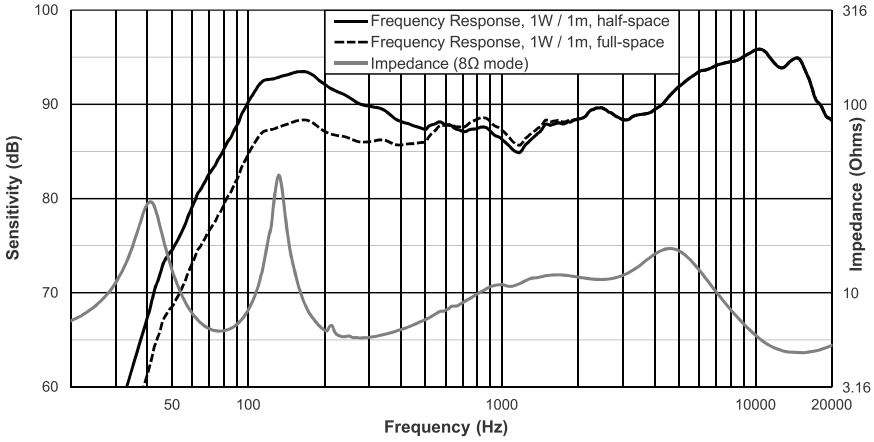

Figure 6.4: EVID-S5.2/EVID-S5.2T frequency response and impedance

6.3 EVID-S8.2/EVID-S8.2T speakers

	EVID-S8.2	EVID-S8.2T
Frequency response (-3 dB):	70 Hz – 20 kHz[1]	
Frequency response (-10 dB):	50 Hz – 20 kHz[1]	
Sensitivity:	90 dB[2]	
Max SPL (calculated):	110 dB (116 dB Peak)	
Coverage angle:	Horizontal 90°, Vertical 90°	
Power handling:	90 W (360 W Peak) Continuous Pink Noise (100 hours)	
Low Z:	Yes	
Nominal impedance:	8 Ω	
Minimum impedance:	6 Ω	
Recommended High-Pass:	50 Hz (24 dB/octave)	
Input transformer (70 V/100 V):	No	60 W
Transformer taps:	N/A	70 V: 7.5 W, 15 W, 30 W, 60 W, 8 Ω 100 V: 15 W, 30 W, 60 W, 8 Ω
LF transducer:	8 inch (203 mm)	
HF transducer:	1 inch (25 mm)	
Connectors:	Captive screws on wall bracket. Removable locking 4-pin connector (Euroblock) – (2) for connection to additional speakers in a distributed line. Max. wire size 12AWG (2.5 mm)	
Environmental:	IP54 (per IEC-60529)	
Color:	Black (RAL 9004) or white (RAL 9003)	
Dimensions (H x W x D):	390 mm x 250 mm x 223 mm (15.4 in x 9.8 in x 8.8 in)[3]	
Net weight:	5.1 kg (11.3 lb)[3]	5.8 kg (12.8 lb)[3]
Shipping weight (pair):	13.0 kg (28.7 lb)	14.8 kg (32.6 lb)
Included hardware:	Mounting bracket and 5-mm Allen wrench	
Packaged quantity:	2	

[1]Half-space (wall mounting).
[2]Half-space (on wall) averaged 100 Hz - 10 kHz, 1 W.
[3]Without brackets.

6.3.1 Dimensions

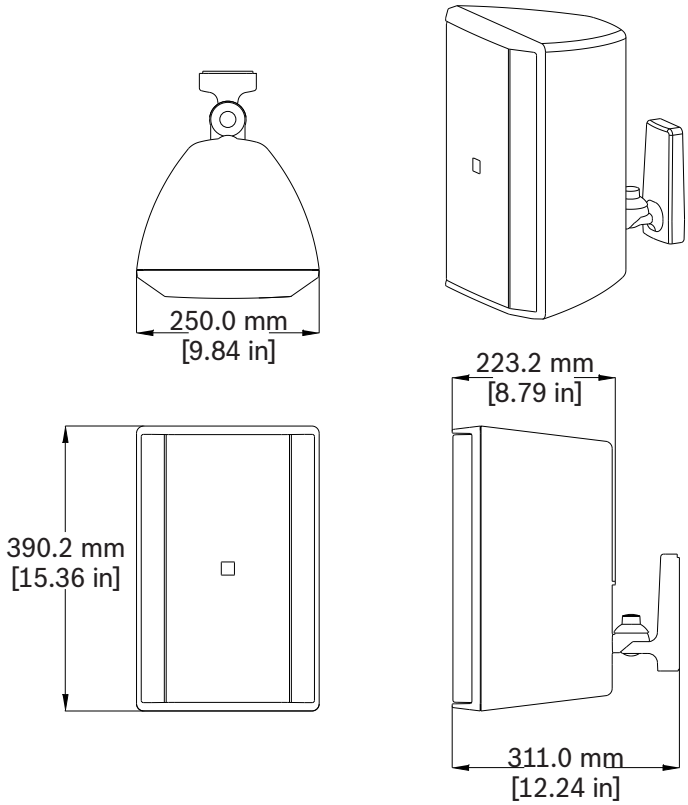

Figure 6.5: EVID-S8.2/EVID-S8.2T dimensions

6.3.2 Frequency response and impedance

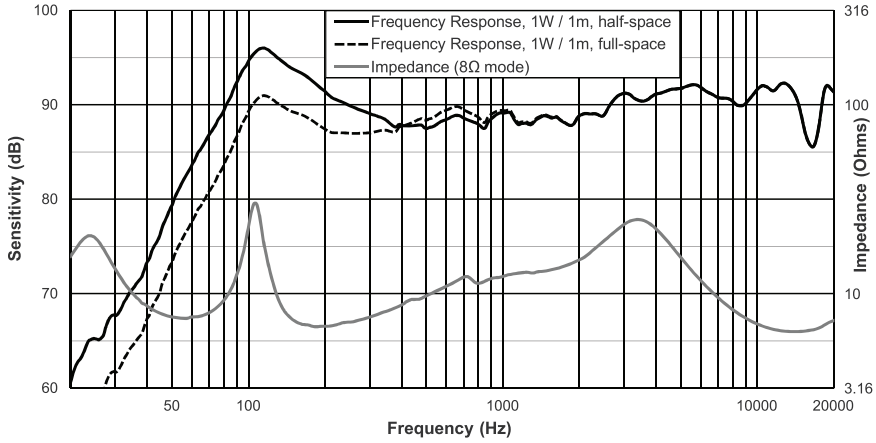

Figure 6.6: EVID-S8.2/EVID-S8.2T frequency response and impedance

7 Wall bracket dimensions

The wall bracket dimensions are not to scale and are for reference only.

7.1 EVID-S4.2/EVID-S4.2T wall bracket dimensions

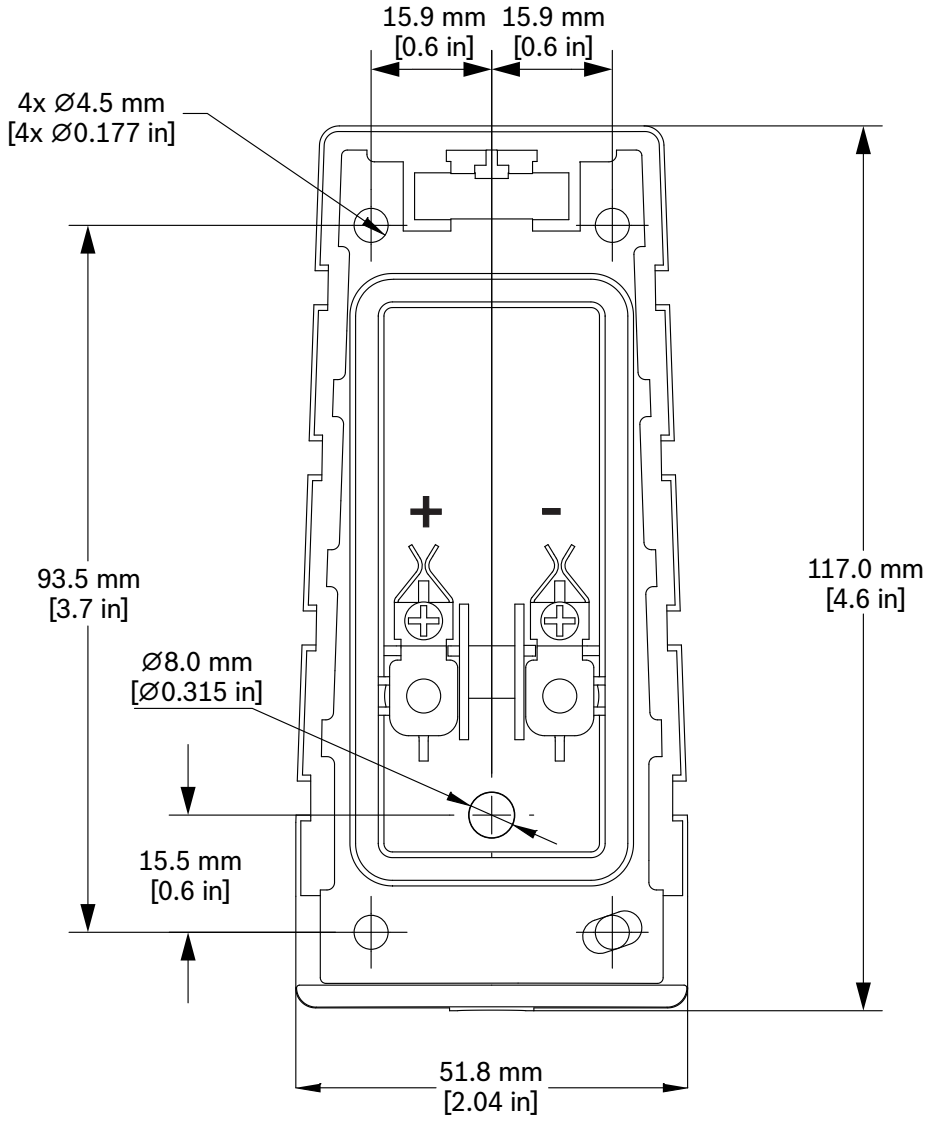

7.2 EVID-S5.2/EVID-S5.2T/EVID-S8.2/EVID-S8.2T wall bracket dimensions

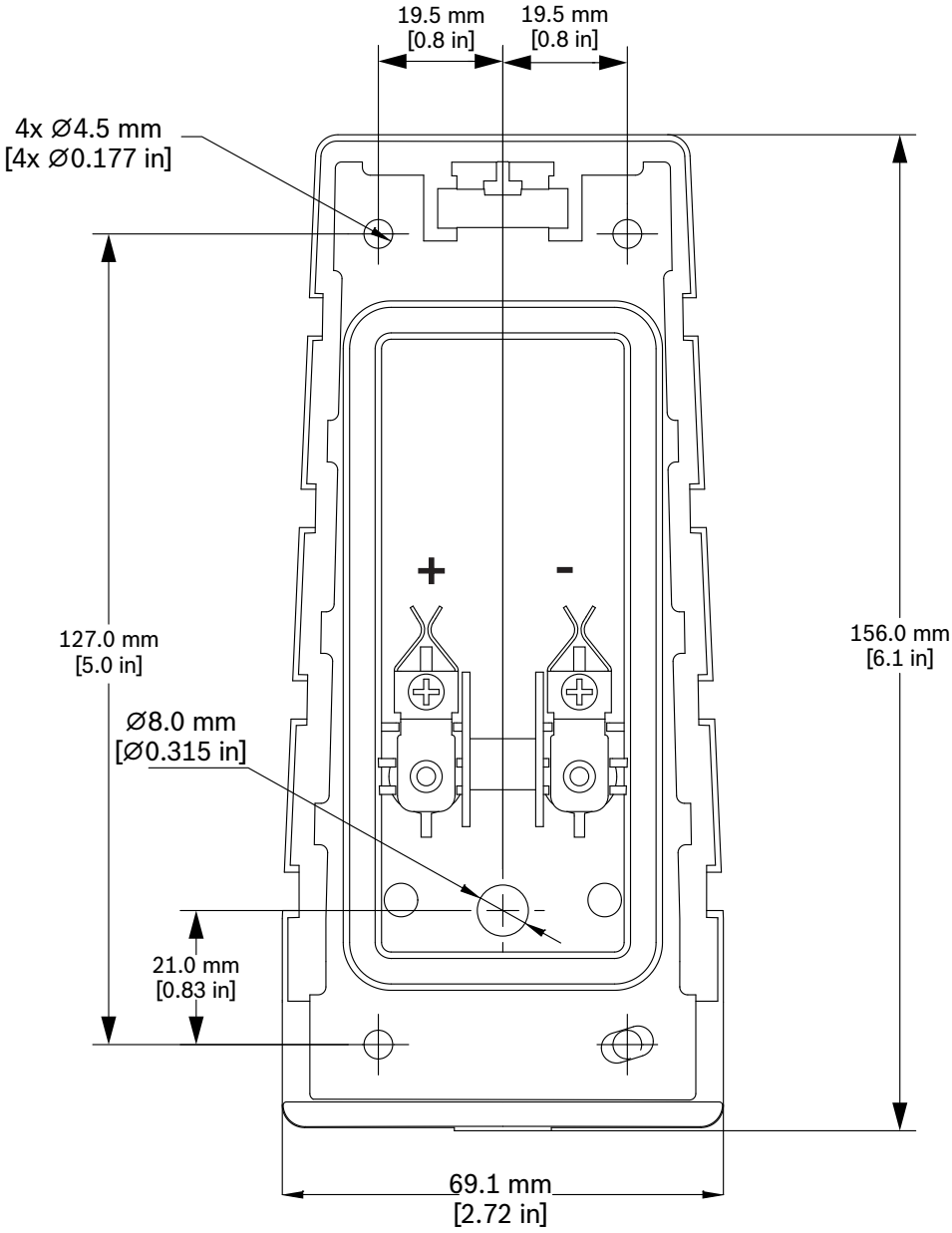

Bosch Security Systems, LLC
130 Perinton Parkway
Fairport, NY 14450
USA
www.electrovoice.com
© Bosch Security Systems, LLC, 2023

EU importer:
Bosch Sicherheitssysteme GmbH
Robert-Bosch-Platz 1
70839 Gerlingen
Germany
© Bosch Sicherheitssysteme GmbH, 2023

202307271551