ETC

Arkon

High End Systems

Type(s)	
Project	
Date	
Notes	

GENERAL INFORMATION

The Arkon is a high-powered automated LED beam light pairing intense output with dynamic eye candy for striking looks in any production. The fixture's even field of light and groundbreaking additive engine provide raw power and volumetric light. That even field also means brighter aerials for gobos and prisms and mind blowing geometric haze effects. For even more visual interest, the fixture form is accented with Arkon Vibes, four pixel-controlled LED accent stripes which make the Arkon pop out as part of the scenery. Arkon is weather-tested and rated to IP54 to amp up the energy on indoor and outdoor stages.

Applications

- Concerts
- Festivals
- Events
- Rental
- Award Shows
- House of Worship

Product Features

- Revolutionary MicroLES LED engine
- Additive color mixing with powerful RBL system
- Fixture output exceeding 10,500 lumens at 2.5°
- Motorized focus
- Dual-prism system with eight combined prism effects
- Twelve-position plus open color wheel to maximize split color aerial effects
- Two diffusion levels, medium and heavy, with ultra-fast movement for exceptional effects
- Eight-position plus open rotating gobo wheel
- Eleven-position plus open fixed gobo wheel with five aperture reducing positions
- Full-color Vibe accents with pixel and macro capabilities viewable from all angles
- Weather-tested and rated to IP54
- No lasers, no need for a variance, no keep-out zones

ORDERING INFORMATION

Model	Description
ARK-B	Arkon, in Carton with Recyclable Foam Inserts, Black
RC-ARKB	Road Case for Arkon, Includes Molded Inserts for Three Fixtures

Color Options: Fixtures ship standard in black. White available by request.
Included Accessories: Fixture includes two (2) 107 mm single-hole Omega brackets, one (1) fixture power cord - bare ends to powerCON® TRUE1 compatible connector, and a safety cable.

Accessories

Model	Description
MV-MOUNT	Multiverse Mounting Kit
CT-5914	Multiverse Connect Module, 2.4 gHz

PRODUCT SPECIFICATIONS

Source

Engine	MicroLES LED super engine
LED Details	460W
Field Lumens	See photometrics on page 4
Max Integrating Sphere Lumens	10,500
LPW	22.8
LED Life	50,000 hours

Color

Color Mixing	Red, Blue, Lime
Color Temperature	2000 K to 10000 K
Calibration	Calibrated whites on CCT Channel
Color Wheel	Twelve (12) dichroic colors plus split colors and open
Vibe Accents	Four LED strips with 33 RGB pixels on each
Vibe Control	Single color mode, 87 animated macros, 61 static macros, 66-pixel control mode

Optical

Beam Angle	2.5°
Aperture Size	140 mm
Pattern Projection	-Rotating and indexable wheel with six (6) interchangeable patterns plus open -Fixed wheel with eleven (11) fixed and stamped patterns plus open
Prism	Dual prism systems with eight (8) combined prism effects
Diffusion	Individual medium and heavy diffusion with ultra-fast insertion
Flicker Control/Hz Range	2.4 kHz, 16 kHz, and 25 kHz

Control

Input Method	DMX (5-pin) or Ethernet
Protocols	DMX via RS-485 Art-Net or sACN via Ethernet
Ethernet Pass-Thru	Passive Ethernet in and thru with and without power
Data Conversion	Patented data conversion system for Ethernet to DMX
Modes (Footprint)	Standard (47 channels), Standard with Pixel (245 channels)
RDM Functions	Yes
UI Type	Full-color graphical UI with back lit 6-button navigational control NFC configuration
Local Control	Yes
Dimming Performance	16-bit, DMX controlled
Wireless	Multiverse via optional adaptor (MV-Mount) and Multiverse Connect Module (CT-5914)

Electrical

Voltage Range	100–240 V 50–60 Hz
Input Method	REAN® power X Series Connectors
Wattage	650 W
Current (Max)	6.5 A @ 100 V 3 A @ 240 V
Inrush (First Half Cycle)	120 V: 37 A 230 V: 51 A
Fixtures per Circuit	3 fixture (R20 module or similar) Note: REAN power X Series connector rated for 20 A (120 V/60 Hz) and 16 A (240 V/50 Hz)

Thermal

Ambient Operating Temp	-20°C to 40°C (-4°F to 104°F)
Fan Mode	Standard, Studio, and Linear Continuous control channel
Stationary Noise	Standard - 43.8 dBA Studio - 39.5 dBA Lowest settable fan setting - 35.0 dBA All tests at 18.4 dBA background noise

Physical

Pan and Tilt Range	630/540° pan, 260° tilt
Max Pan/Tilt Speed	360° in 1.62 s/180° in 0.88 s
Materials	Steel and aluminum frame with aluminum and molded plastic covers
Color Options	Black, white by request
Mounting Options	Any orientation
IP Rating	IP54, for use both indoors and in temporary outdoor installations
Weight	20.7 kg (45.7 lb)
Included Accessories	X Series IP65 to bare end fixture tail Two (2) 107 mm single-hole Omega brackets Safety cable

Warranty

Warranty Details	etcconnect.com/Warranty

Regulatory & Compliance

Approved regulatory standards	cETLus Listed Listed to UL 1573 Certified to CSA STD. C22.2 No: 166 CE Compliant UKCA Compliant CB Certified
Complies to the ROHS directive	Yes

Safety

Safety	Minimum distance to illuminated surface = 6.0 m (19.7 ft) Minimum distance from fixture head to combustible materials = 0.1 m (4.0 in)

Notes: All LED sources experience some lessening of light output and some color shift over time. LED output will vary with thermal conditions. Thermal conditions can be affected by ambient temperatures and orientation.

FEATURE DETAILS

Rotating Gobo Details

Outside Diameter	13.8 mm (0.54 in)
Image Diameter	8 mm (0.31 in)
Materials	0.5 mm aluminum 1.1 mm glass Borofloat®

Rotating Gobo Wheel	Stamped Fixed Gobo Wheel
1 - Fine Swirl	1 - 6 Blocks
2 - Bar	2 - Broken Tunnel
3 - Cross Spin	3 - Compass Star
4 - 4 Circles	4 - 3 Bars
5 - Tru-Tang	5 - Invruleaux
6 - 4 Spikes	6 - Star
7 - Pinwheel	7 - Aperture 25
8 - Tunrangle	8 - Aperture 30
	9 - Aperture 40
	10 - Aperture 50
	11 - Max Circle
	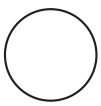

Prism Details

Movement	Four prism flags with eight combined effects
Materials	Molded optical glass

1 - Star 5

2 - Linear 4

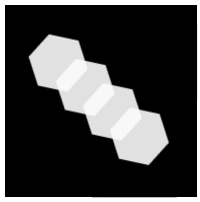

3 - Circle 12

4 - Ring 8

5 - Dual Ring 22

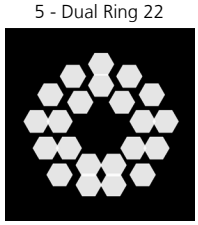

6 - Oval 18

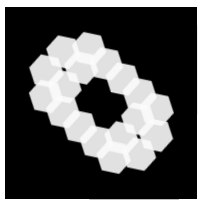

7 - Ring 15 Dual Rotating

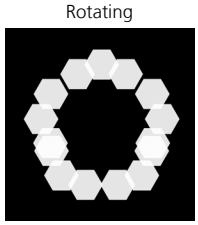

8 - Rectangle 28 Dual Rotating

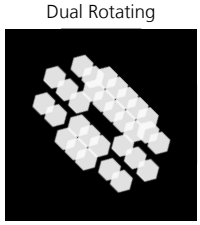

Color Wheel Details

Shape	Glued wedge
Materials	1.1 mm glass Borofloats

1 - Red	2 - Pink
3 - Amber	4 - UV
5 - Cyan	6 - Orange
7 - Purple	8 - CTB
9 - Indigo	10 - CTO
11 - Magenta	12 - Green

PHOTOMETRIC DATA

	Degree	Candela	Field Lumens	Power Usage	Lumens Per Watt
All LED on	2.5°	6,050,600	10,500	460 W	22.8

To determine center beam illumination in footcandles at any throw distance (ft), divide candela by the throw distance (ft) squared. ftcd = candela/ft^2

To determine center beam illumination in lux at any throw distance (m), divide candela by the throw distance (m) squared: lux = candela/m^2

6500 K TM-30

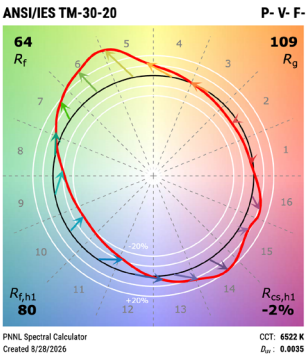

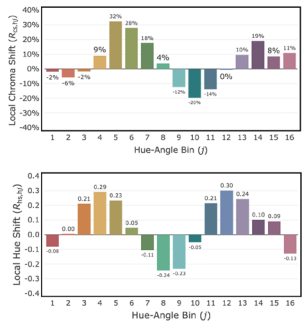

Additional Color Metrics	
CRI R_a (R_g)	67 (88)
TLCI	43

WEATHER PROTECTED

Arkon's rain-proof and dust-proof design allows it to be used in all types of weather and climates. Thanks to advanced IP54 design features and hydrophobic filtering techniques, Arkon can be used outdoors just as readily as indoors, and all without additional maintenance, vacuum seal requirements, or specialized tools.

Outdoor-related features

- Rain-Proof
- Dust-Protected
- Hydrophobic Air Filtering
- Cold Weather Preheating
- Control Loss Sun Protection
- Defogging Technology

PRODUCT DIMENSIONS

Model	Height		Width		Depth		Weight	
	in	mm	in	mm	in	mm	lb	kg
Arkon**	24.2	614	13.9	353	8.4	214	45.7	20.7
Arkon in Box with Foam Insert	29.9	760	18.3	465	15.4	390	56.2	25.5

**Does not include mounting hardware

Arkon

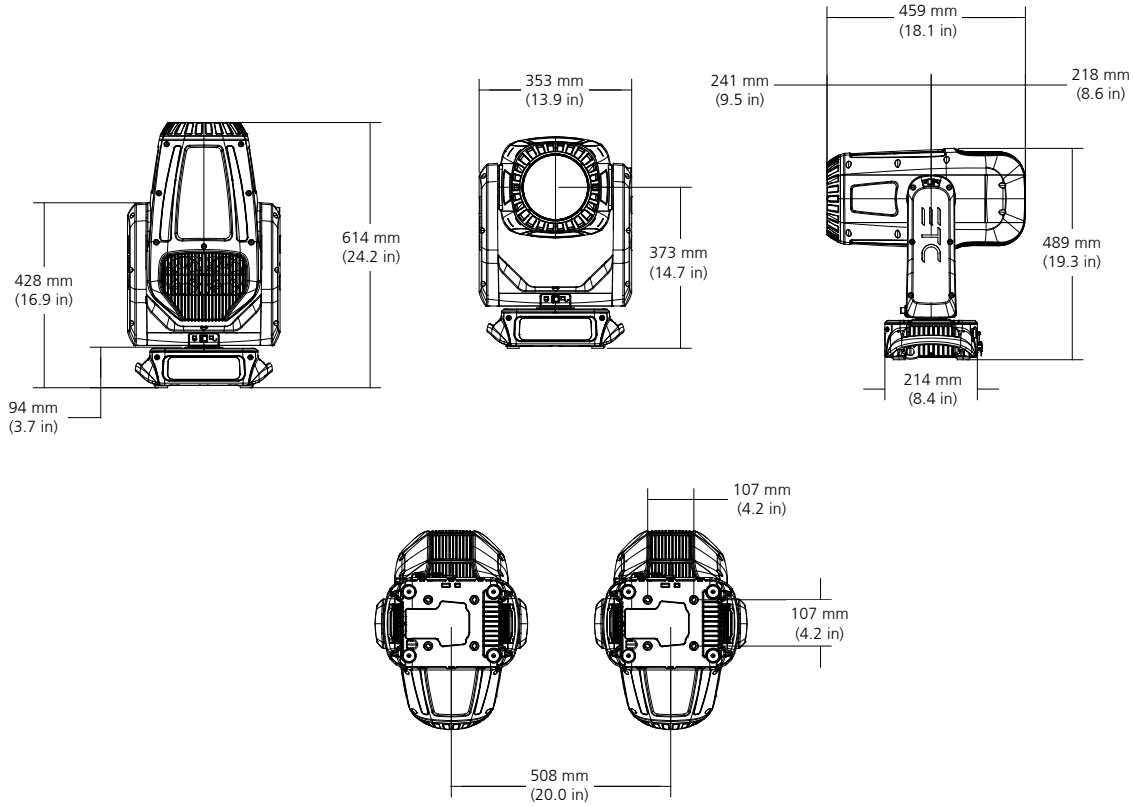

ADDITIONAL ORDERING INFORMATION

Additional Accessories

Model Number	Description
OB107-1	Omega bracket, 107 mm single-hole, black (included)
OB107-3	Omega bracket, 107 mm three-hole, black
MI-ARKB	Molded insert for Arkon
T1PA-A	Fixture Power Cord Upgrade, 5 ft TRUE1 TOP to Parallel Blade U-Ground (Edison)
T1PA-SP	Fixture Power Cord Upgrade, Stage Pin to powerCON TRUE1 TOP, 20 A
T1PA-L620	Fixture Power Cord Upgrade, L6-20 to powerCON TRUE1 TOP, 20 A
T1PA-L520	Fixture Power Cord Upgrade, L5-20 to powerCON TRUE1 TOP, 20 A
MEGA-CLW	MegaClaw™
HALF-COU	Half-Coupler, 2″ Alloy, Truss Clamp
MINI-CLW	Mini-Claw™

Molded Case Insert Dimensions

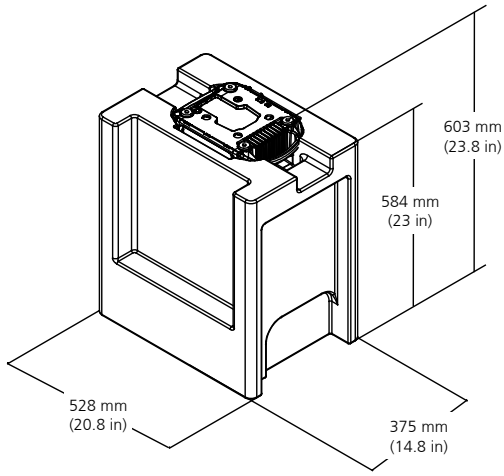

Optional Roadcase Dimensions

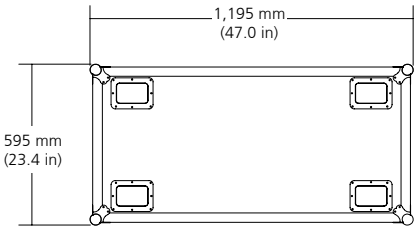

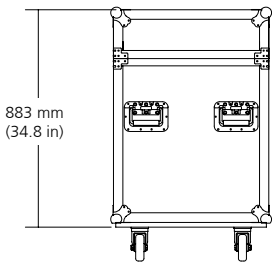

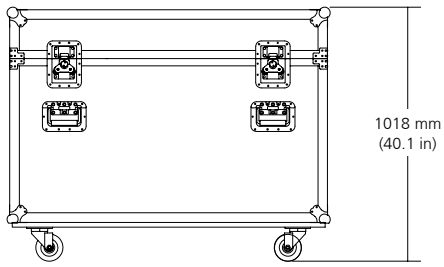

Case Weight:
86 kg (192 lb)
Includes 3 Molded Inserts and no Fixtures

Corporate Headquarters ▪ Middleton, WI USA
Global Offices ▪ London, UK ▪ Rome, IT ▪ Holzkirchen, DE ▪ Paris, FR ▪ Hong Kong ▪ Dubai, UAE
New York, NY ▪ Orlando, FL ▪ Los Angeles, CA ▪ Austin, TX ▪ Squamish, BC ▪ Victor, NY
©2026 ETC. All Rights Reserved. All product information and specifications subject to change. Rev Rev A 2026-10
*Trademark and patent info: etcconnect.com/IP ▪ Third-party license agreement info: etcconnect.com/licenses

etcconnect.com